INSTALLATION INSTRUCTIONS

FOR UPFLOW/HORIZONTAL TWO STAGE PSC GAS FURNACES

(-)802P UPFLOW/HORIZONTAL SERIES

(-)(-)80MDP UPFLOW/HORIZONTAL SERIES

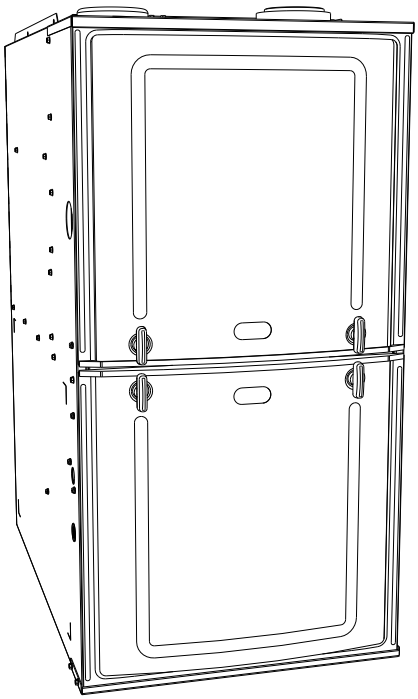

RECOGNIZE THIS SYMBOL AS AN INDICATION OF IMPORTANT SAFETY INFORMATION!

⚠ WARNING

IF THE INFORMATION IN THESE INSTRUCTIONS IS NOT FOLLOWED EXACTLY, A FIRE OR EXPLOSION MAY RESULT, CAUSING PROPERTY DAMAGE, PERSONAL INJURY OR DEATH.

⚠ WARNING

THESE INSTRUCTIONS ARE INTENDED AS AN AID TO QUALIFIED SERVICE PERSONNEL FOR PROPER INSTALLATION, ADJUSTMENT AND OPERATION OF THIS UNIT. READ THESE INSTRUCTIONS THOROUGHLY BEFORE ATTEMPTING INSTALLATION OR OPERATION. FAILURE TO FOLLOW THESE INSTRUCTIONS MAY RESULT IN IMPROPER INSTALLATION, ADJUSTMENT, SERVICE OR MAINTENANCE, POSSIBLY RESULTING IN FIRE, ELECTRICAL SHOCK, CARBON MONOXIDE POISONING, EXPLOSION, PROPERTY DAMAGE, PERSONAL INJURY OR DEATH.

⚠ WARNING

PROPOSITION 65 WARNING: THIS PRODUCT CONTAINS CHEMICALS KNOWN TO THE STATE OF CALIFORNIA TO CAUSE CANCER, BIRTH DEFECTS OR OTHER REPRODUCTIVE HARM.

⚠ WARNING

— Do not store or use gasoline or other flammable vapors and liquids, or other combustible materials in the vicinity of this or any other appliance.

— WHAT TO DO IF YOU SMELL GAS
- Do not try to light any appliance.
- Do not touch any electrical switch; do not use any phone in your building.
- Immediately call your gas supplier from a neighbor's phone. Follow the gas supplier's instructions.
- If you cannot reach your gas supplier, call the fire department.
- Do not return to your home until authorized by the gas supplier or fire department.

— DO NOT RELY ON SMELL ALONE TO DETECT LEAKS. DUE TO VARIOUS FACTORS, YOU MAY NOT BE ABLE TO SMELL FUEL GASES.
- U.L. and/or C.S.A. recognized fuel gas and CO (carbon monoxide) detectors are recommended in all applications, and their installation should be in accordance with the manufacturer's recommendations and/or local laws, rules, regulations, or customs.

— Improper installation, adjustment, alteration, service or maintenance can cause injury, property damage or death. Refer to this manual. Installation and service must be performed by a qualified installer, service agency or the gas supplier. In the commonwealth of Massachusetts, installation must be performed by a licensed plumber or gas fitter for appropriate fuel.

BA001-02

DO NOT DESTROY THIS MANUAL. PLEASE READ CAREFULLY AND KEEP IN A SAFE PLACE FOR FUTURE REFERENCE BY A SERVICEMAN.

DESIGN CERTIFIED

Accredited by the RvA

ABS Quality Evaluations, Inc. Management System Certification

ANAB ACCREDITED

ISO 9001:2008

Certificate Number: 30164

← Factory Use Only

92-24161-146-05
SUPERSEDES 92-24161-146-04

TABLE OF CONTENTS

Contents

1 **TABLE OF CONTENTS** 2

2 **GENERAL INFORMATION** 3
- Receiving 4
- California Proposition 65 Note 4
- Checklist 5

3 **SAFETY INFORMATION** 6
- Warnings 6
- Important Information About Efficiency and Quality . . 7

4 **LOCATION REQUIREMENTS** 8
- Site Selection 8
- Clearance – Accessibility 8
- Upflow Dimensions and Clearance Table 9

5 **DUCTING** 11
- Upflow Installations 11
- Horizontal Units 13

6 **COMBUSTION AND VENTILATION AIR** 14
- Combustion Air Requirements 14
- Venting 19
- “B-1” Vertical Venting 19
- Special Vent Systems (SVS) 20
- Power Vent Systems 22
- Existing Vent Systems 22

7 **GAS SUPPLY** 23
- Gas Supply and Piping 23
- Gas Piping 24
- Gas Pressure 25
- Setting Gas Pressure 26

8 **LP CONVERSION** 27

9 **ELECTRICAL WIRING** 28
- Reversing The Electrical Connection 28
- Thermostat 29

10 **ACCESSORIES** 30
- Field Installed Option Accessories 30
- Electronic Air Cleaner 30
- Humidifier 30
- Filter 30
- RXGW-B01 Chimney Adapter 30
- Four Inch Flue Adapter 30

11 **TWINNING** 32
- Furnace Twinning Installations 32
- Control Boards 33-35

12 **HIGH ALTITUDE** 36
- Natural Gas at High Altitudes 36
- LP Gas at High Altitudes 38

13 **STARTUP PROCEDURES** 39
- Sequence of Operation 39

14 **DIAGNOSTICS AND FAULT CODES** 40

15 **LOCKOUT** 41

16 **FIELD SELECTIONS & ADJUSTMENTS** 42
- Field Selections – Dipswitches 42

17 **FAULT CLEAR** 43

18 **FAULT RECALL** 43

19 **FLAME STATUS L.E.D.** 43

20 **TIMING DIAGRAM** 43

21 **ADJUSTING OR CHECKING FURNACE INPUT** . 44

22 **SETTING INPUT RATE** 45

23 **AIRFLOW** 46
- Blower Speed Selection 47

24 **SAFETY FEATURES** 48

25 **MAINTENANCE** 49

26 **SYSTEM OPERATION INFORMATION** 50

27 **ANNUAL INSPECTION** 50

28 **REPLACEMENT PARTS** 50

24 **TROUBLESHOOTING** 51

30 **WIRING DIAGRAM** 52

IMPORTANT: *TO INSURE PROPER INSTALLATION AND OPERATION OF THIS PRODUCT, COMPLETELY READ ALL INSTRUCTIONS PRIOR TO ATTEMPTING TO ASSEMBLE, INSTALL, OPERATE, MAINTAIN OR REPAIR THIS PRODUCT. UPON UNPACKING OF THE FURNACE, INSPECT ALL PARTS FOR DAMAGE PRIOR TO INSTALLATION AND START-UP.*

GENERAL INFORMATION

NOTE: A heat loss calculation should be performed to properly determine the required furnace BTU size for the structure. Also, the duct must be properly designed and installed for proper airflow. Existing ductwork must be inspected for proper size and to make sure that it is properly sealed. Proper airflow is necessary for both user comfort and equipment performance.

Before opening the furnace carton, verify that the data tags on the carton specify the furnace model number that was ordered from the distributor and are correct for the installation. If not, return the unit without opening the carton. If the model number is correct, open the carton and verify that the furnace rating label specifies the same furnace model number that is specified on the carton label. If the model numbers do not match, return the furnace to the distributor.

IMPORTANT: Proper application, installation and maintenance of this furnace and system is a must if consumers are to receive the full benefits for which they have paid.

The (-)802P/(-)(-)80MDP series furnaces are design certified by CSA for use with natural and propane gases as follows:

As a Category I furnace, it may be vented vertically with type B-1 vent pipe and also may be common vented as described in these instructions.

This furnace should be installed in accordance with the American National Standard Z223.1 - latest edition booklet entitled “National Fuel Gas Code” (NFPA 54), and the requirements or codes of the local utility or other authority having jurisdiction including local plumbing or waste water codes.

With the introduction of higher efficiency furnaces, special attention must be paid to the venting system. Only listed venting systems may be used as stated in the installation instructions and the *National Fuel Gas Code, ANSI Z223.1 (NFPA 54),*. Since furnace technology and venting requirements are changing, awareness of local, state, and federal codes and industry changes is imperative.

General Information

FIGURE 1
FURNACE COMPONENTS

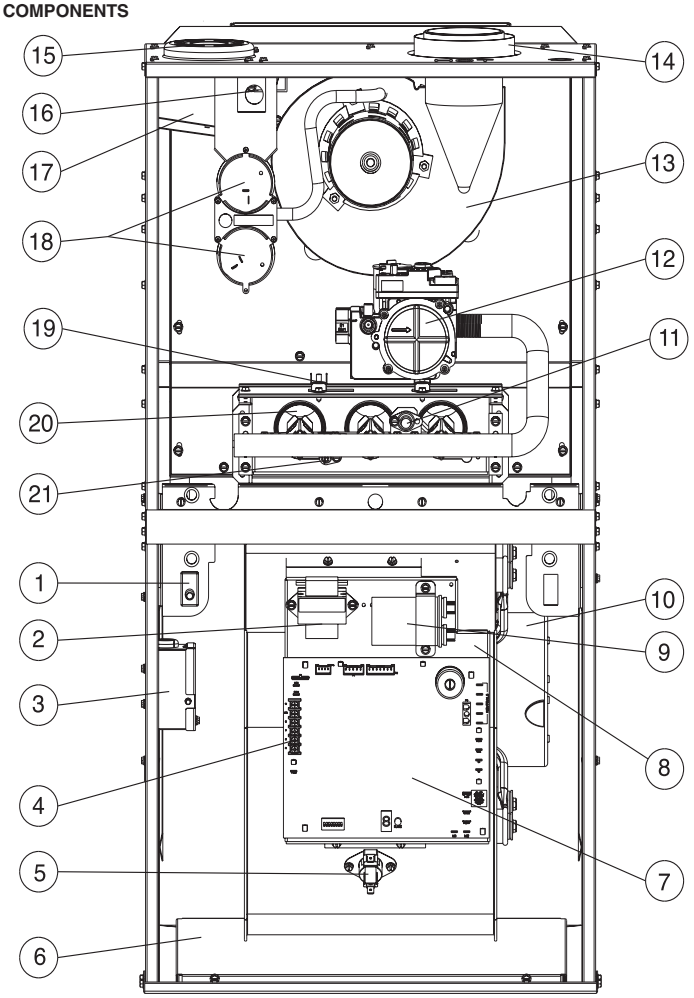

1.) DOOR SWITCH
2.) TRANSFORMER
3.) JUNCTION BOX
4.) LOW VOLTAGE TERMINAL
5.)HEAT ASSISTED LIMIT CONTROL (HALC)
6.) SOLID METAL BASE PAN
7.) FURNACE CONTROL
8.) CONTROL MOUNTING PLATE
9.) CAPACITOR
10.) BLOWER
11.) IGNITER
12.) GAS VALVE
13.) INDUCED DRAFT BLOWER
14.) 4” FLUE ADAPTER (OPTIONAL)
15.) COMBUSTION AIR INLET
16.) MAIN LIMIT
17.) COMBUSTION AIR DIFFUSER
18.) PRESSURE SWITCHES, HIGH AND LOW STAGE
19.) OVER TEMPERATURE SWITCH
20.) BURNER
21.) FLAME SENSOR

ST-A1220-16-00

GENERAL INFORMATION (cont.)

Install this furnace in accordance with the American National Standard Z223.1 – latest edition entitled “National Fuel Gas Code” (NFPA54) or codes of the local utilities or other authorities having jurisdiction. This is available from the following:

National Fire Protection Association, Inc.
Batterymarch Park
Quincy, MA 02269

CSA-INTERNATIONAL
5060 Spectrum Way
Mississauga, Ontario
Canada L4W5N6
Online: www.csa.ca

RECEIVING

Immediately upon receipt, all cartons and contents should be inspected for transit damage. Units with damaged cartons should be opened immediately. If damage is found, it should be noted on the delivery papers, and a damage claim filed with the last carrier.

- After unit has been delivered to job site, remove carton taking care not to damage unit.
- Check the unit rating plate for unit size, electric heat, coil, voltage, phase, etc. to be sure equipment matches what is required for the job specification.
- Read the entire instructions before starting the installation.
- Some building codes require extra cabinet insulation and gasketing when unit is installed in attic applications.
- If installed in an unconditioned space, apply caulking around the power wires, control wires, refrigerant tubing and condensate line where they enter the cabinet. Seal the power wires on the inside where they exit conduit opening. Caulking is required to prevent air leakage into and condensate from forming inside the unit, control box, and on electrical controls.
- Install the unit in such a way as to allow necessary access to the coil/filter rack and blower/control compartment.
- Install the unit in accordance with any local code which may apply and the national codes. Latest editions are available from: “National Fire Protection Association, Inc., Batterymarch Park, Quincy, MA 02269.” These publications are:
- ANSI/NFPA No. 70-(Latest Edition) National Electrical Code.
- NFPA90A Installation of Air Conditioning and Ventilating Systems.
- NFPA90B Installation of warm air heating and air conditioning systems.
- The equipment has been evaluated in accordance with the Code of Federal Regulations, Chapter XX, Part 3280.

CALIFORNIA RESIDENTS ONLY

IMPORTANT: All manufacturer products meet current Federal OSHA Guidelines for safety. California Proposition 65 warnings are required for certain products, which are not covered by the OSHA standards.

California's Proposition 65 requires warnings for products sold in California that contain, or produce, any of over 600 listed chemicals known to the State of California to cause cancer or birth defects such as fiberglass insulation, lead in brass, and combustion products from natural gas.

All “new equipment” shipped for sale in California will have labels stating that the product contains and/or produces Proposition 65 chemicals. Although we have not changed our processes, having the same label on all our products facilitates manufacturing and shipping. We cannot always know “when, or if” products will be sold in the California market.

You may receive inquiries from customers about chemicals found in, or produced by, some of our heating and air-conditioning equipment, or found in natural gas used with some of our products. Listed below are those chemicals and substances commonly associated with similar equipment in our industry and other manufacturers.

- Glass Wool (Fiberglass) Insulation
- Carbon Monoxide (CO)
- Formaldehyde
- Benzene

More details are available at the Websites for OSHA (Occupational Safety and Health Administration), at www.osha.gov and the State of California's OEHHA (Office of Environmental Health Hazard Assessment), at www.oehha.org. Consumer education is important since the chemicals and substances on the list are found in our daily lives. Most consumers are aware that products present safety and health risks, when improperly used, handled and maintained.

Installation Instructions remain with the furnace as a reference guide to the servicing contractor. We recommend that performance and installation data be recorded for future reference on this sheet to meet service and warranty obligations so that job site information is available when required.

Installation Checklist

REFER TO INSTALLATION INSTRUCTIONS

GAS SUPPLY

_____ Correct pipe size (record size)

_____ Correct supply pressure (during furnace operation) (record pressure)

_____ Manifold pressure (record upstream pressure)

_____ No gas leaks

_____ L.P. Kit Number (if applicable) (record kit number)

ELECTRICAL

_____ 115 V.A.C. supply (Dedicated Circuit) (record voltage)

_____ Polarity observed

_____ Furnace properly grounded

_____ Correct wire size (record type and gauge)

FURNACE INSTALLATION

_____ Correct clearance to combustibles (record clearance)

_____ Correct clearance for service (at front) (record clearance)

DUCT STATIC PRESSURE

_____ in. w.c. on heating speed (record static pressure)

_____ in. w.c. on cooling speed (record static pressure)

_____ Air temperature rise in heat (record air temperature rise)

_____ Air temperature rise in cool (record air temperature rise)

VENTING

_____ Correct vent pipe diameter and length (according to NFGC tables) _____ Vent connection size

_____ Correct venting material (according to NFGC tables)

_____ Correct lining for masonry chimneys

_____ Adequate clearance from combustibles

_____ Proper negative pressure reading in the vent

_____ Vent pipe secured to induced draft blower housing

COMBUSTION AIR

_____ Proper source of combustion air

_____ Correct combustion air opening size

_____ Optional attic combustion air pull

_____ Non-attic combustion air pull

SAFETY INFORMATION

⚠ WARNING

DO NOT INSTALL THIS FURNACE IN A MOBILE HOME!! THIS FURNACE IS NOT APPROVED FOR INSTALLATION IN A MOBILE HOME. DOING SO COULD CAUSE FIRE, PROPERTY DAMAGE, PERSONAL INJURY OR DEATH.

⚠ WARNING

INSTALL THIS FURNACE ONLY IN A LOCATION AND POSITION AS SPECIFIED IN THE LOCATION REQUIREMENTS AND CONSIDERATIONS SECTION OF THESE INSTRUCTIONS.

⚠ WARNING

IMPROPER INSTALLATION, OR INSTALLATION NOT MADE IN ACCORDANCE WITH THE CSA INTERNATIONAL (CSA) CERTIFICATION OR THESE INSTRUCTIONS, CAN RESULT IN UNSATISFACTORY OPERATION AND/OR DANGEROUS CONDITIONS AND ARE NOT COVERED BY THE MANUFACTURER'S WARRANTY.

⚠ WARNING

DO NOT BYPASS, JUMPER, OR REMOVE ANY SAFETY SWITCH FROM THE FURNACE CONTROL CIRCUIT. IF A SAFETY SWITCH CAUSES THE FURNACE TO SHUT DOWN OR OPERATE INTERMITTENTLY, IT IS AN INDICATION OF A POTENTIAL SAFETY HAZARD THAT MUST BE ADDRESSED BY A QUALIFIED TECHNICIAN, SERVICE AGENCY OR THE GAS SUPPLIER. DO NOT RESET SAFETY CONTROLS WITHOUT CORRECTIVE ACTION AND/OR VERIFICATION OF PROPER SAFE OPERATION BY A QUALIFIED INSTALLER, SERVICE AGENCY OR THE GAS SUPPLIER.

REPLACE ANY SAFETY CONTROL COMPONENT ONLY WITH IDENTICAL OEM REPLACEMENT PARTS. WHEN A NEW SAFETY SWITCH IS INSTALLED, IT MUST BE TESTED FOR A MINIMUM OF 15 MINUTES WITH THE FURNACE OPERATING AT MAXIMUM INPUT RATE AND WITH BOTH BLOWER AND BURNER DOOR INSTALLED. IF THE FURNACE IS INSTALLED IN A CLOSET, THE CLOSET DOOR MUST ALSO BE CLOSED FOR THIS TEST. REPEAT THE TEST AT THE MINIMUM INPUT RATE IF THE FURNACE IS A MULTI-STAGE FURNACE.

⚠ WARNING

USE ONLY WITH THE TYPE OF GAS APPROVED FOR THIS FURNACE. REFER TO THE FURNACE RATING PLATE.

⚠ WARNING

NEVER TEST FOR GAS LEAKS WITH AN OPEN FLAME. USE A COMMERCIALLY AVAILABLE SOAP SOLUTION MADE SPECIFICALLY FOR THE DETECTION OF LEAKS TO CHECK ALL CONNECTIONS, AS SPECIFIED IN GAS SUPPLY AND PIPING SECTION OF THESE INSTRUCTIONS.

⚠ WARNING

COMBUSTION AND VENTILATION AIR MUST BE PROVIDED TO THE FURNACE AS REQUIRED BY THE NATIONAL FUEL-GAS CODE (U.S.) AND THE COMBUSTION AND VENTILATION AIR SECTION OF THESE INSTRUCTIONS.

⚠ WARNING

COMBUSTION PRODUCTS MUST BE DISCHARGED OUTDOORS. CONNECT THIS FURNACE TO AN APPROVED VENT SYSTEM ONLY, AS SPECIFIED IN THE VENT PIPE INSTALLATION SECTION OF THESE INSTRUCTIONS.

⚠ WARNING

WHEN A FURNACE IS INSTALLED SO THAT SUPPLY DUCTS CARRY AIR CIRCULATED BY THE FURNACE TO AREAS OUTSIDE THE SPACE CONTAINING THE FURNACE, THE RETURN AIR SHALL ALSO BE HANDLED BY DUCT(S) SEALED TO THE FURNACE CASING AND TERMINATING OUTSIDE THE SPACE CONTAINING THE FURNACE.

⚠ WARNING

WHENEVER THE FACTORY RETURN-AIR CONNECTION IS NOT USED IT MUST BE SEALED. A SOLID METAL BASE PLATE MUST BE INSTALLED AND SEALED. FACTORY BASE PLATES ARE AVAILABLE AS ACCESSORY ITEMS. (PART NUMBERS ARE LISTED IN THE SPEC SHEET FOR THE FURNACE.) FAILURE TO INSTALL AND SEAL THE BASE PLATE AND RETURN AIR DUCT CONNECTIONS MAY ALLOW CARBON MONOXIDE AND OTHER CONTAMINANTS TO BE DRAWN INTO THE CONDITIONED AIR SPACE AND DISTRIBUTED THROUGHOUT THE HEATED SPACE.

⚠ WARNING

DO NOT OPERATE THE SYSTEM WITHOUT FILTERS. A PORTION OF THE DUST ENTRAINED IN THE AIR MAY TEMPORARILY LODGE IN THE AIR DUCT RUNS AND AT THE SUPPLY REGISTERS. ANY CIRCULATED DUST PARTICLES WILL BE HEATED AND CHARRED BY CONTACT WITH THE FURNACE HEAT EXCHANGER. THIS SOOTY RESIDUE WILL SOIL CEILINGS, WALLS, DRAPES, CARPETS AND OTHER HOUSEHOLD ARTICLES. SOOT DAMAGE MAY ALSO RESULT WITH, OR WITHOUT, FILTERS IN PLACE, WHEN CERTAIN TYPES OF CANDLES ARE BURNED, OR CANDLEWICKS ARE LEFT UNTRIMMED.

⚠ WARNING

IN COMPLIANCE WITH RECOGNIZED CODES, IT IS RECOMMENDED THAT AN AUXILIARY DRAIN PAN BE INSTALLED UNDER THIS FURNACE AND ANY INSTALLED EVAPORATOR COIL THAT IS LOCATED IN ANY AREA OF A STRUCTURE WHERE DAMAGE TO THE BUILDING OR BUILDING CONTENTS MAY OCCUR AS A RESULT OF AN OVERFLOW OF THE A/C COIL DRAIN PAN.

⚠ WARNING

BLOWER AND BURNERS MUST NEVER BE OPERATED WITHOUT THE BLOWER DOOR IN PLACE. THIS IS TO PREVENT DRAWING GAS FUMES (WHICH COULD CONTAIN HAZARDOUS CARBON MONOXIDE) INTO THE HOME THAT COULD RESULT IN PERSONAL INJURY OR DEATH.

⚠ WARNING

ALWAYS INSTALL THE FURNACE TO OPERATE WITHIN THE FURNACE'S INTENDED TEMPERATURE-RISE RANGE WITH A DUCT SYSTEM WHICH HAS AN EXTERNAL STATIC PRESSURE WITHIN THE ALLOWABLE RANGE, AS SPECIFIED IN THE DUCTING SECTION OF THESE INSTRUCTIONS. SEE ALSO FURNACE RATING PLATE.

INSTALLATION MUST COMPLY WITH ALL INSTALLATION INSTRUCTIONS INCLUDING:

- **PROPER VENT INSTALLATION;**
- **FURNACE OPERATING UNDER THERMOSTAT CONTROL;**
- **RETURN AIR DUCT SEALED TO THE FURNACE;**
- **AIR FILTERS IN PLACE;**
- **SET FURNACE INPUT RATE AND TEMPERATURE RISE PER RATING PLATE MARKINGS;**
- **MEANS FOR PROVIDING OUTDOOR AIR REQUIRED FOR COMBUSTION;**
- **RETURN AIR TEMPERATURE MAINTAINED BETWEEN 55°F (13°C) AND 80°F (27°C); AND**
- **CLEAN FURNACE, DUCT WORK AND COMPONENTS UPON SUBSTANTIAL COMPLETION OF THE CONSTRUCTION PROCESS, AND VERIFY THAT THE FURNACE OPERATING CONDITIONS INCLUDING IGNITION, INPUT RATE, TEMPERATURE RISE AND VENTING, ACCORDING TO THE INSTRUCTIONS AND CODES.**

IMPORTANT INFORMATION ABOUT EFFICIENCY AND INDOOR AIR QUALITY

Central cooling and heating equipment is only as efficient as the duct system that carries the cooled or heated air. To maintain efficiency, comfort and good indoor air quality, it is important to have the proper balance between the air being supplied to each room and the air returning to the cooling and heating equipment.

Proper balance and sealing of the duct system improves the efficiency of the heating and air conditioning system and improves the indoor air quality of the home by reducing the amount of airborne pollutants that enter homes from spaces where the ductwork and / or equipment is located. The manufacturer and the U.S. Environmental Protection Agency's Energy Star Program recommend that central duct systems be checked by a qualified contractor for proper balance and sealing.

⚠ WARNING

DUCT LEAKS CAN CREATE AN UNBALANCED SYSTEM AND DRAW POLLUTANTS SUCH AS DIRT, DUST, FUMES AND ODORS INTO THE HOME CAUSING PROPERTY DAMAGE. FUMES AND ODORS FROM TOXIC, VOLATILE OR FLAMMABLE CHEMICALS, AS WELL AS AUTOMOBILE EXHAUST AND CARBON MONOXIDE (CO), CAN BE DRAWN INTO THE LIVING SPACE THROUGH LEAKING DUCTS AND UNBALANCED DUCT SYSTEMS CAUSING PERSONAL INJURY OR DEATH (SEE FIGURE 2).

- **IF AIR-MOVING EQUIPMENT OR DUCTWORK IS LOCATED IN GARAGES OR OFF-GARAGE STORAGE AREAS - ALL JOINTS, SEAMS, AND OPENINGS IN THE EQUIPMENT AND DUCT MUST BE SEALED TO LIMIT THE MIGRATION OF TOXIC FUMES AND ODORS INCLUDING CARBON MONOXIDE FROM MIGRATING INTO THE LIVING SPACE.**
- **IF AIR-MOVING EQUIPMENT OR DUCTWORK IS LOCATED IN SPACES CONTAINING FUEL BURNING APPLIANCES SUCH AS WATER HEATERS OR BOILERS - ALL JOINTS, SEAMS, AND OPENINGS IN THE EQUIPMENT AND DUCT MUST ALSO BE SEALED TO PREVENT DEPRESSURIZATION OF THE SPACE AND POSSIBLE MIGRATION OF COMBUSTION BYPRODUCTS INCLUDING CARBON MONOXIDE INTO THE LIVING SPACE.**

FIGURE 2
MIGRATION OF DANGEROUS SUBSTANCES, FUMES, AND ODORS INTO LIVING SPACES

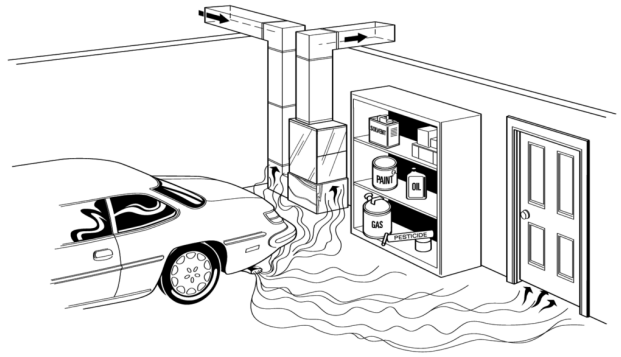

Adapted from *Residential Duct Diagnostics and Repair*, with permission of Air Conditioning Contractors of America (ACCA).

LOCATION REQUIREMENTS

GENERAL INFORMATION

⚠ WARNING

WHEN THIS FURNACE IS INSTALLED IN A RESIDENTIAL GARAGE, IT MUST BE INSTALLED SO THE BURNERS AND IGNITION SOURCE ARE LOCATED NO LESS THAN 18 INCHES [450MM] ABOVE THE FLOOR. THIS IS TO PREVENT THE RISK OF IGNITING FLAMMABLE VAPORS WHICH MAY BE PRESENT IN A GARAGE. ALSO, THE FURNACE MUST BE LOCATED OR PROTECTED TO AVOID PHYSICAL DAMAGE BY VEHICLES. FAILURE TO FOLLOW THESE WARNINGS CAN CAUSE A FIRE OR EXPLOSION, RESULTING IN PROPERTY DAMAGE, PERSONAL INJURY OR DEATH.

1. **IMPORTANT:** If installing the unit over a finished ceiling or living area, be certain to install an auxiliary condensate drain pan under the entire unit. This auxiliary drain pan should extend under any evaporator coil installed with the furnace.
2. **IMPORTANT:** If using a cooling evaporator coil with this furnace, be sure the air passes over the heat exchanger before passing over the cooling coil. The cooled air passing over the warm ambient air inside the heat exchanger tubes can cause condensation inside the tubes resulting in corrosion and eventual failure.

If there are manual dampers, they must be equipped to prevent heating or cooling operation unless the damper is in the full heat or cool position.

3. **NOTE:** This furnace is shipped with heat exchanger support brackets installed under the back of the heat exchanger. These may be removed before installation, but it is not required.
4. IMPORTANT: *This furnace is not approved or recommended for installation on its back, with access doors facing upwards.*
5. This furnace is suitable for installation in buildings constructed on-site. This heating unit should be centralized with respect to the heat distribution system as much as practicable.
6. **NOTE:** These furnaces are approved for installation in attics, as well as alcoves, utility rooms, closets and crawlspaces.
7. **IMPORTANT**: *Support this unit when installed. For attic or crawl space installation, horizontal furnaces may be installed on combustible wood flooring or by using support brackets. See Figure 3.*
8. **IMPORTANT**: *If installing in a utility room, be sure the door is wide enough to:*
   a. *allow the largest part of the furnace to pass; or*
   b. *allow any other appliance (such as a water heater) to pass.*

⚠ WARNING

THIS FURNACE IS NOT APPROVED OR RECOMMENDED FOR INSTALLATION ON ITS BACK, WITH ACCESS DOORS FACING UPWARDS.

SITE SELECTION

1. Select a site in the building near the center of the proposed, or existing, duct system.
2. Give consideration to the vent system piping when selecting the furnace location. Be sure the venting system can get from the furnace to the termination with minimal length and elbows.
3. Locate the furnace near the existing gas piping. Or, if running a new gas line, locate the furnace to minimize the length and elbows in the gas piping. See Figure 3.
4. Locate the furnace to maintain proper clearance to combustibles as shown in following Figure 4.

⚠ WARNING

DO NOT LIFT THE UNIT BY THE HEAT EXCHANGER TUBES. DOING SO CAN DAMAGE THE HEAT EXCHANGER ASSEMBLY.

CLEARANCE – ACCESSIBILITY

The design of forced air furnaces with input ratings as listed in the tables under Figure 4 are certified by CSA-International for the clearances to combustible materials shown in inches.

See name/rating plate and clearance label for specific model number and clearance information.

Service clearance of at least 24 inches (30 cm) is recommended in front of all furnaces.

NOTE: Use recommended 24” (30 cm) clearance if accessibility clearances are greater than fire protection clearances.

ACCESSIBILITY CLEARANCES, WHERE GREATER, MUST TAKE PRECEDENCE OVER FIRE PROTECTION CLEARANCES.

GENERAL INFORMATION (cont.)

⚠ WARNING

UPFLOW AND HORIZONTAL FURNACES ARE DESIGN-CERTIFIED FOR INSTALLATION ON COMBUSTIBLE FLOORS. NOTE, HOWEVER, THAT FURNACES MUST NOT BE INSTALLED DIRECTLY ON CARPETING, TILE OR OTHER COMBUSTIBLE MATERIAL OTHER THAN WOOD FLOORING. INSTALLATION ON A COMBUSTIBLE MATERIAL CAN RESULT IN FIRE, CAUSING PROPERTY DAMAGE, PERSONAL INJURY OR DEATH.

FIGURE 3

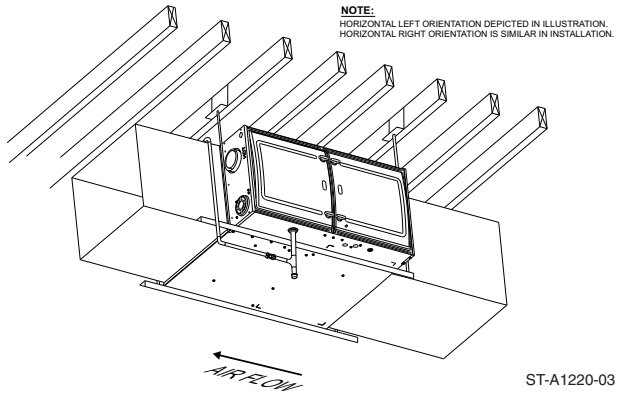

⚠ WARNING

COMBUSTIBLE MATERIAL MUST NOT BE PLACED ON OR AGAINST THE FURNACE JACKET. THE AREA AROUND THE FURNACE MUST BE KEPT CLEAR AND FREE OF ALL COMBUSTIBLE MATERIALS INCLUDING GASOLINE AND OTHER FLAMMABLE VAPORS AND LIQUIDS. PLACEMENT OF COMBUSTIBLE MATERIALS ON, AGAINST OR AROUND THE FURNACE JACKET CAN CAUSE AN EXPLOSION OR FIRE RESULTING IN PROPERTY DAMAGE, PERSONAL INJURY OR DEATH. THE HOMEOWNER SHOULD BE CAUTIONED THAT THE FURNACE AREA MUST NOT BE USED AS A BROOM CLOSET OR FOR ANY OTHER STORAGE PURPOSES.

CLEARANCE TO COMBUSTIBLE MATERIAL (INCHES) UPFLOW/HORIZONTAL MODELS

Input	A	B	C	D	E	F	Left Side	REDUCED CLEARANCE (IN.) Right Side	Back	Top	Front	Vent	Ship. Wgts.
050	14	12 27/32	10 5/8	①	11 1/2	1 7/8	0	4②	0	1	3	6③	85 lbs.
050	17 1/2	16 11/32	12 3/8	①	15	2 1/2	0	3②	0	1	3	6③	105 lbs.
075	17 1/2	16 11/32	12 3/8	①	15	2 1/2	0	3②	0	1	3	6③	105 lbs.
075	21	19 27/32	14 1/8	①	18 1/2	2 1/2	0	0	0	1	3	6③	120 lbs.
100	21	19 27/32	14 1/8	①	18 1/2	2 1/2	0	0	0	1	3	6③	120 lbs.
125	24 1/2	23 11/32	15 7/8	①	22	2 1/2	0	0	0	1	3	6③	140 lbs.
150	24 1/2	23 11/32	15 7/8	①	22	2 1/2	0	0	0	1	3	6③	150 lbs.

① May require 3" to 4" or 3" or 5" adapter. 4" adapter optional.
② May be 0" with type B vent.
③ May be 1" with type B vent.
*See furnace speck sheet for model availability.

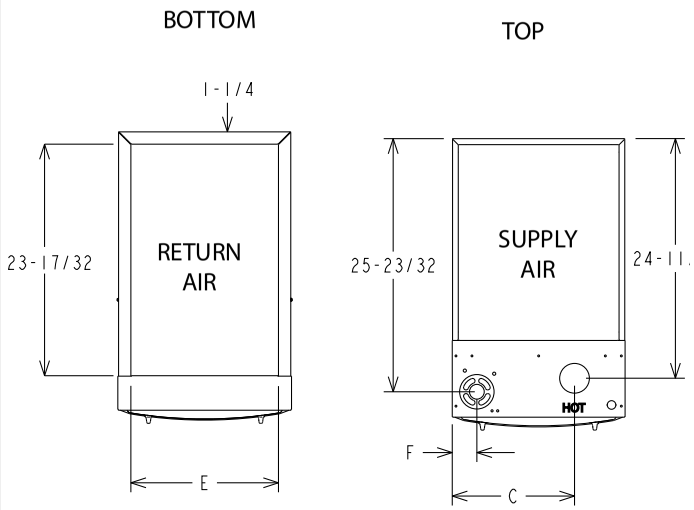

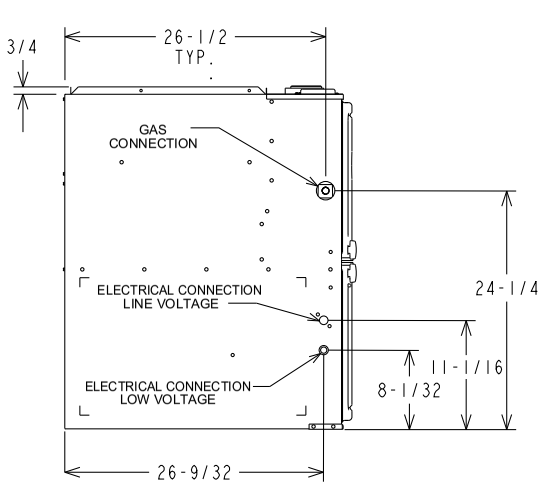

LEFT SIDE

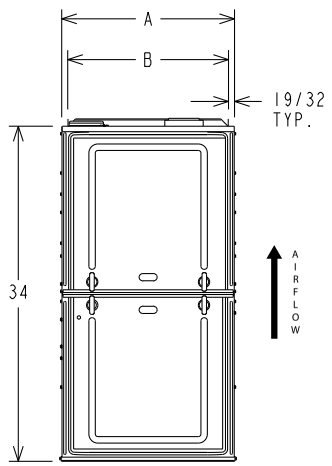

FRONT

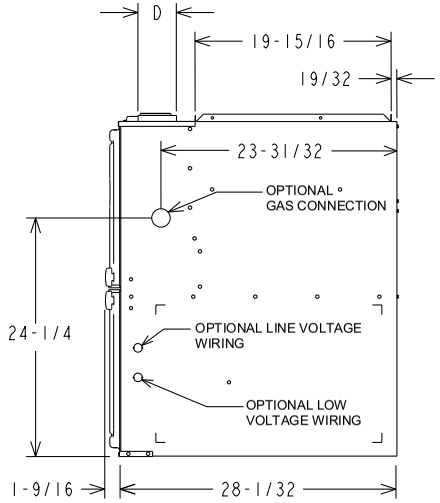

RIGHT SIDE

ST-A1220-04

FIGURE 4
UPFLOW/HORIZONTAL DIMENSIONS

DUCTING

Proper air flow is required for the correct operation of this furnace. Restricted air flow can cause erratic operation and can damage the heat exchanger. The duct system must carry the correct amount of air for heating and cooling if summer air conditioning is used.

⚠ WARNING

SOME HEATING AIRFLOW VALUES MAY BE HIGHER THAN THOSE REQUIRED FOR COOLING. BE SURE TO SIZE DUCT FOR THE MAXIMUM POSSIBLE AIRFLOW VALUE.

SIZE AIRFLOW DISTRIBUTION SYSTEM TO ACCEPTABLE INDUSTRY STANDARDS AND METHODS. TOTAL STATIC PRESSURE DROP OF THE AIR DISTRIBUTION SYSTEM SHOULD NOT EXCEED .8 INCHES W.C. THIS WILL INCLUDE ANY AIR CONDITIONER COIL, AIR FILTRATION SYSTEM, ZONING SYSTEM, DUCTWORK, ETC. REFER TO ADDED EQUIPMENT TECHNICAL INFORMATION TO OBTAIN PRESSURE DROP INFORMATION WHEN EQUIPMENT IS OPERATING AT RECOMMENDED HEATING OR COOLING CFMS.

IMPORTANT: When using outside air, design and adjust the system to maintain a return air temperature ABOVE 55° F during the heating season.

NOTE: Return air grilles and warm air registers must not be obstructed or closed.

⚠ WARNING

UPFLOW FURNACE: THE SOLID METAL BASE (SHIPPED WITH THE FURNACE) PLATE MUST BE INSTALLED IN THE FURNACE BOTTOM WHEN USING SIDE AIR RETURN. FAILURE TO INSTALL A BASE PLATE COULD CAUSE THE PRODUCTS OF COMBUSTION TO CIRCULATE INTO THE LIVING SPACE AND CREATE POTENTIALLY HAZARDOUS CONDITIONS, INCLUDING CARBON MONOXIDE POISONING OR DEATH. FOR BOTTOM RETURN, A SOLID METAL BASE PAN MUST NOT BE INSTALLED. SEE FIGURE 5.

UPFLOW INSTALLATIONS

1. Position the unit to minimize long runs of duct or runs of duct with many turns and elbows.
2. For side return: Cut an opening in the side. The opening should be cut the full width and height of the knockouts on the unit. See Figure 6.
3. If summer air conditioning is desired, position the indoor coil on the supply-air side of the unit. Ensure that no air can bypass the coil.
4. Connect the furnace to the supply air plenum. See Figure 7.
5. Connect the return air ducting to the return-air opening at the bottom and/or side of the unit. Make the connections air-tight to prevent the migration of toxic fumes and odors including carbon monoxide from migrating into the living space.
6. If a filter is installed near the furnace, be sure to have adequate space for installation and removal of the unit filter.
7. **NOTE:** Where the maximum airflow is 1800 CFM or more, BOTH sides or the bottom must be used for the return air. Do not take return air from the back of the unit.

NOTE: DO NOT take return air from furnace rooms, garages or cold areas. Avoid return air from utility rooms, kitchens, laundry rooms and bathrooms.

⚠ WARNING

BLOWER AND BURNERS MUST NEVER BE OPERATED WITHOUT THE BLOWER DOOR IN PLACE. THIS IS TO PREVENT DRAWING GAS FUMES (WHICH COULD CONTAIN HAZARDOUS CARBON MONOXIDE) INTO THE HOME THAT COULD RESULT IN PERSONAL INJURY OR DEATH.

DUCTING

FIGURE 5

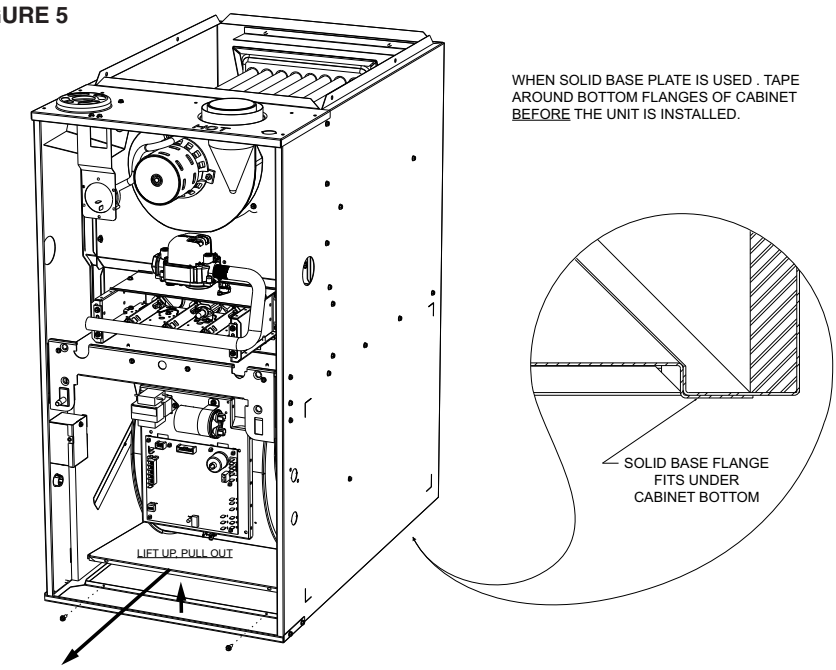

1. REMOVE 2 SCREWS, LIFT BASE UP, SLIDE FORWARD TO REMOVE.
2. INSTALLATION IS REVERSE OF REMOVAL.
** VERIFY REAR FLANGE IS SEALED PROPERLY AS SHOWN IN DETAIL.

ST-A1220-10

FIGURE 6

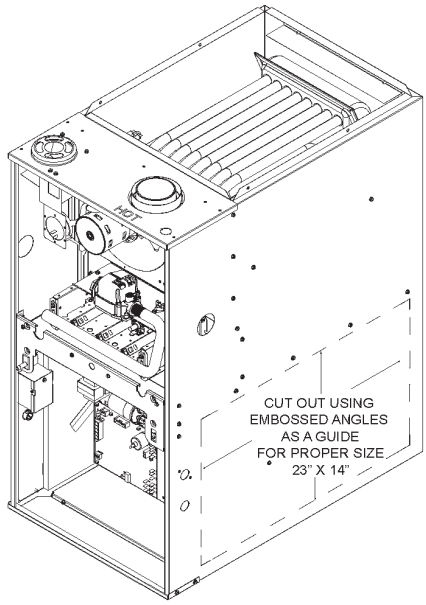

ST-A1220-08

FIGURE 7

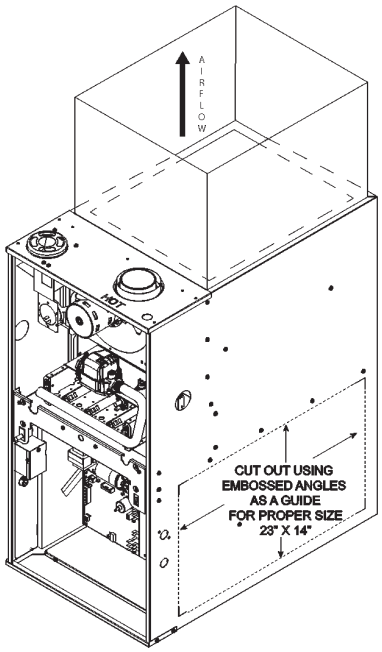

ST-A1220-11

HORIZONTAL UNITS

1. Position the unit to minimize long runs of duct or runs of duct with many turns and elbows.
2. Unit can be mounted left or right side airflow configuration.
3. Position the unit on adequate supports or by using support brackets (see Figure 8) and connect supply plenum.
4. If summer air conditioning is desired, position the indoor coil on the supply air side of the unit. Insure that no air can bypass this coil.
5. Secure the four angle brackets to the return air opening. See Figure 9. Connect the return air ducting to the return air opening at the top of the unit. Make the connection air tight to prevent entraining combustion gases from an adjacent fuel-burning appliance.

NOTE: Do not block furnace access with support rods. Maintain clearances recommended in Figure 8. Allow enough space for proper service maintenance or replacement of the heat exchanger and blower assembly.

FIGURE 8
HORIZONTAL FURNACE INSTALLED W/SUPPORT BRACKETS

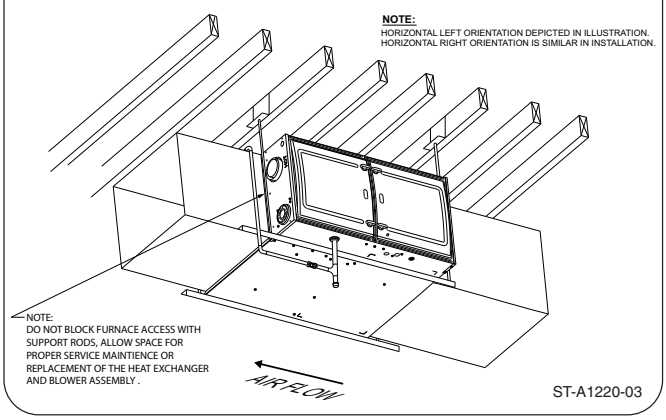

FIGURE 9
HORIZONTAL RETURN AIR DUCT
(LEFT-HAND AIRFLOW POSITION SHOWN)

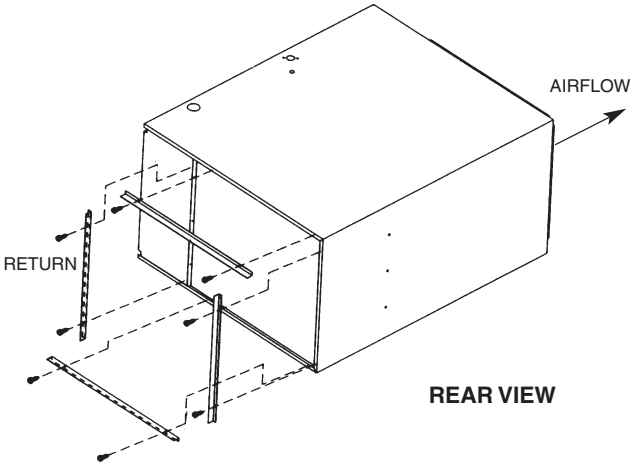

FOUR ANGLE BRACKETS CAN BE INSTALLED HORIZONTALLY. THESE BRACKETS MAY BE USED TO SECURE THE RETURN AIR DUCT TO A HORIZONTAL UNIT.

COMBUSTION AND VENTILATION AIR

COMBUSTION AIR REQUIREMENTS

IMPORTANT: *This is not a direct vent furnace. Review venting instructions before installing.*

⚠ WARNING

THIS FURNACE AND ANY OTHER FUEL-BURNING APPLIANCE MUST BE PROVIDED WITH ENOUGH FRESH AIR FOR PROPER COMBUSTION AND VENTILATION OF THE FLUE GASES. MOST HOMES WILL REQUIRE THAT OUTSIDE AIR BE SUPPLIED INTO THE FURNACE AREA. FAILURE TO DO SO CAN CAUSE DEATH FROM CARBON MONOXIDE POISONING.

⚠ WARNING

ADEQUATE FACILITIES FOR PROVIDING AIR FOR COMBUSTION AND VENTILATION MUST BE PROVIDED IN ACCORDANCE WITH SECTION 5.3, AIR FOR COMBUSTION AND VENTILATION, OF THE NATIONAL FUEL GAS CODE, ANSI, Z223.1 LATEST EDITION APPLICABLE PROVISIONS FOR THE LOCAL BUILDING CODES, AND NOT OBSTRUCTED SO AS TO PREVENT THE FLOW OF AIR TO THE FURNACE.

1. **IMPORTANT**: *Air for combustion and ventilation must not come from a corrosive atmosphere. Any failure due to corrosive elements in the atmosphere is excluded from warranty coverage.*
2. Combustion air must be free of acid forming chemicals; such as sulphur, fluorine and chlorine. These elements are found in aerosol sprays, detergents, bleaches, cleaning solvents, air fresheners, paint and varnish removers, refrigerants and many other commercial and household products. Vapors from these products when burned in a gas flame form acid compounds. The acid compounds increase the dew point temperature of the flue products and are highly corrosive after they condense.
3. The following types of installation may require OUTDOOR AIR for combustion, due to chemical exposures:
   - Commercial buildings
   - Buildings with indoor pools
   - Furnaces installed in laundry rooms
   - Furnaces in hobby or craft rooms
   - Furnaces installed near chemical storage areas.
4. If combustion air is exposed to the following substances (but not limited to the following), it should not be used and the furnace may require outdoor air for combustion.
   - Permanent wave solutions
   - Chlorinated waxes and cleaners
   - Chlorine-based swimming pool chemicals
   - Water softening chemicals
   - De-icing salts or chemicals
   - Carbon tetrachloride
   - Halogen type refrigerants
   - Cleaning solvents (such as perchloroethylene)
   - Printing inks, paint removers, varnishes, etc.
   - Hydrochloric acid
   - Cements and glues
   - Antistatic fabric softeners for clothes dryers
   - Masonry curing and acid washing materials

⚠ WARNING

ALL FURNACE INSTALLATIONS MUST COMPLY WITH THE NATIONAL FUEL GAS CODE AND LOCAL CODES TO PROVIDE ADEQUATE COMBUSTION AND VENTILATION AIR FOR THE FURNACE. FAILURE TO DO SO CAN CREATE HAZARDOUS CONDITIONS RESULTING IN PROPERTY DAMAGE, BODILY INJURY OR DEATH FROM SMOKE, FIRE OR CARBON MONOXIDE.

Combustion air requirements are determined by whether the furnace is in an open (unconfined) area or in a confined space such as a closet or small room.

When the furnace is installed in the same space with other gas appliances, such as a water heater, be sure there is an adequate supply of combustion and ventilation air for the furnace and the other appliances. Do not delete or reduce the combustion air supply required by the other gas appliances in this space. See Z223.1, National Fuel Gas Code (NFPA 54). An unconfined space must have at least 50 cubic feet (volume) for each 1,000 BTUH of the total input of all appliances in the space. If the open space containing the appliances is in a building with tight construction (contemporary construction), outside air may still be required for the appliances to burn and vent properly. Outside air openings should be sized the same as for a confined space.

IMPORTANT: ONLY THE CURRENT VENT INSTRUCTIONS APPLY. All gas furnaces cannot be common-vented.

OVERTEMPERATURE SAFETY SWITCHES

Furnaces are equipped with safety switches in the burner compartment to protect against over-temperature conditions caused by inadequate combustion air supply. If a switch is tripped it must be manually reset after clearing the fault condition which caused it to open.

⚠ WARNING

DO NOT BYPASS, JUMPER, OR REMOVE ANY SAFETY SWITCH FROM THE FURNACE CONTROL CIRCUIT. IF A SAFETY SWITCH CAUSES THE FURNACE TO SHUT DOWN OR OPERATE INTERMITTENTLY, IT IS AN INDICATION OF A POTENTIAL SAFETY HAZARD THAT MUST BE ADDRESSED BY A QUALIFIED TECHNICIAN, SERVICE AGENCY OR THE GAS SUPPLIER. DO NOT RESET SAFETY CONTROLS WITHOUT CORRECTIVE ACTION AND/OR VERIFICATION OF PROPER SAFE OPERATION BY A QUALIFIED INSTALLER, SERVICE AGENCY OR THE GAS SUPPLIER.

REPLACE ANY SAFETY CONTROL COMPONENT ONLY WITH IDENTICAL OEM REPLACEMENT PARTS

COMBUSTION AND VENTILATION AIR (cont.)

COMBUSTION AIR REQUIREMENTS: CONFINED AND UNCONFINED SPACES

⚠ WARNING

ALL FURNACE INSTALLATIONS MUST COMPLY WITH THE NATIONAL FUEL GAS CODE, NFPA 54 AND LOCAL CODES TO PROVIDE ADEQUATE COMBUSTION AND VENTILATION AIR FOR THE FURNACE. FAILURE TO DO SO CAN RESULT IN EXPLOSION, FIRE, PROPERTY DAMAGE, CARBON MONOXIDE POISONING, PERSONAL INJURY OR DEATH.

For improved indoor air quality, added safety and product performance we recommend direct vent type installations. If non-direct type vent system is used, the requirements for combustion air must be provided as identified in the National Fuel Gas Code.

Combustion air requirements are determined by whether the furnace is in an open (unconfined) area or in a confined space such as a closet or small room.

⚠ WARNING

READ AND FOLLOW THE *GENERAL VENTING REQUIREMENTS AND GUIDELINES* OF THIS MANUAL FOR ADDITIONAL VENTING REQUIREMENTS PERTAINING TO ALL FURNACE INSTALLATIONS (INCLUDING DIRECT AND NON-DIRECT VENTING). FAILURE TO FOLLOW ALL INSTRUCTIONS IN THIS MANUAL CAN RESULT IN EQUIPMENT FAILURE, EQUIPMENT DAMAGE, PROPERTY DAMAGE, PERSONAL INJURY OR DEATH.

FURNACE LOCATED IN AN UNCONFINED SPACE

USING INDOOR AIR FOR COMBUSTION:

An unconfined space must have at least 50 cubic feet for each 1,000 BTUH of total input for all appliances in the space. ***Table 1*** below specifies minimum space requirements and a few examples of the room sizes required for different inputs. The sizes are based on 8-foot ceilings.

If the open space containing the furnace is in a building with tight construction, outside air may still be required for the furnace to operate and vent properly. Outside air openings should be sized the same as for a confined space.

TABLE 1: MINIMUM SPACE REQUIREMENTS FOR UNCONFINED SPACE, NON-DIRECT VENT

Input (BTUH)	Minimum Space (Cubic Ft)	Minimum Area with 8ft Ceilings (sq ft)	Typical Room Size w/ 8' Ceilings (ft x ft)
50,000	2,500	313	16 x 20
75,000	3,750	470	24 x 20
100,000	5,000	625	32 x 20
125,000	6,300	790	36 x 30
150,000	7,500	940	32 x 30

FURNACE LOCATED IN A CONFINED SPACE

A confined space is defined as any space for a given furnace input rating which is smaller than that which is specified in ***Table 1*** as minimum for an "*unconfined*" space. If the space is less than that specified in this table, the space is defined as *"confined".*

If the space is small enough to be designated as "confined", it must have openings into the space which are located in accordance with the requirements set forth in the following subsections A and B. Size connected to the heated area or to the outside, and by the input of **ALL** appliances in the space.

If the confined space is within a building with tight construction, combustion air must be taken from outdoors or from an area freely communicating with the outdoors.

A. USING INDOOR AIR FOR COMBUSTION:

IMPORTANT: Air should not be taken from a heated space with a fireplace, exhaust fan or other device that may produce negative pressure.

If combustion air is taken from the heated area, the openings must each have at least 100 square inches of free area. Each opening must have at least one square inch of free area for each 1,000 BTUH of total input in the space. ***Table 2*** shows some typical examples of openings required for combustion air openings required for a confined space.

TABLE 2: MINIMUM FREE AREA OPENING REQUIRED FOR A FURNACE LOCATED IN A CONFINED SPACE USING INDOOR AIR FOR COMBUSTION.

Input (BTUH)	Free Area for Each Opening (sq inches)
50,000	100
75,000	100
100,000	100
125,000	130
150,000	150

B. USING OUTDOOR AIR FOR COMBUSTION:

IMPORTANT: Do not take air from an attic space that is equipped with power ventilation.

The confined space must communicate with the outdoors in accordance with Methods 1 or 2 below. The minimum dimension of air openings shall not be less than 3 inches. Where ducts are used, they shall be of the same cross-sectional area as the free area of the openings to which they connect.

METHOD 1:
Two permanent openings, one located within 12 inches of the top and one located within 12 inches of the bottom of the enclosure, shall be provided. The openings shall communicate directly, or by ducts, with the outdoors or spaces (crawl or attic) that freely communicate with the outdoors.

COMBUSTION AND VENTILATION AIR (cont.)

COMBUSTION AIR REQUIREMENTS: CONFINED AND UNCONFINED SPACES

TABLE 3: MINIMUM FREE AREA REQUIRED FOR EACH OPENING (WHEN TWO OPENINGS ARE USED) WITH A FURNACE:
1. LOCATED IN A CONFINED SPACE
2. USING OUTDOOR AIR FOR COMBUSTION
3. COMMUNICATING DIRECTLY TO THE OUTSIDE THROUGH AN OPENING OR THROUGH A VERTICAL DUCT.

Total Input for ALL Gas Appliances (BTUH)	Free Area for Each Opening when 2 Separate Openings are used (sq inches)	Round Pipe Duct Diameter (Vertical Duct Only) (inches)
50,000	13	5
75,000	19	5
100,000	25	6
125,000	32	8
150,000	38	8

A. Where directly communicating with the outdoors through an opening or where communicating to the outdoors through vertical ducts as shown in ***Figure 11***, each opening shall have a minimum free area of 1 square inch for each 4,000 BTUH of total appliance input rating of all equipment in the enclosure. ***Table 3*** specifies the minimum area for each of the 2 combustion air openings and minimum round duct diameter for direct openings and vertical ducting only.

B. Where communicating with the outdoors through horizontal ducts, each opening shall have a minimum free area of 1 square inch for each 2,000 BTUH of total appliance input rating of all equipment in the enclosure (see ***Figure 12***). ***Table 4*** specifies the minimum area for each of the 2 combustion air openings and minimum round duct diameter for horizontal ducting only.

TABLE 4: MINIMUM FREE AREA REQUIRED FOR EACH OPENING (WHEN TWO OPENINGS ARE USED) WITH A FURNACE:
1. LOCATED IN A CONFINED SPACE
2. USING OUTDOOR AIR FOR COMBUSTION
3. COMMUNICATING DIRECTLY TO THE OUTSIDE THROUGH A HORIZONTAL DUCT.

Total Input for ALL Gas Appliances (BTUH)	Free Area for Each Opening when 2 Separate Openings are used (sq inches)	Round Pipe Duct Diameter (Horizontal Duct Only) (inches)
50,000	25	6
75,000	38	8
100,000	50	8
125,000	63	10
150,000	75	10

TABLE 5: MINIMUM FREE AREA REQUIRED FOR EACH OPENING (WHEN TWO OPENINGS ARE USED) WITH A FURNACE:
1. LOCATED IN A CONFINED SPACE
2. USING OUTDOOR AIR FOR COMBUSTION
3. COMMUNICATING DIRECTLY TO THE OUTSIDE THROUGH A HORIZONTAL DUCT.

Total Input for ALL Gas Appliances (BTUH)	Free Area for an Opening when 1 Opening is used (sq inches)	Round Pipe Duct Diameter (inches)
50,000	25	6
75,000	38	8
100,000	50	8
125,000	63	10
150,000	75	10

METHOD 2:
One permanent opening located within 12 inches of the top of the enclosure, shall be permitted where the equipment has clearances of at least 1 inch from the sides and back and 6 inches from the front of the appliance. The opening shall directly communicate with the outdoors or communicate through a vertical or horizontal duct to the outdoors or spaces (crawl or attic) that freely communicate with the outdoors, and shall have a minimum of:

FIGURE 10
NON-DIRECT VENT AIR FROM HEATED SPACE

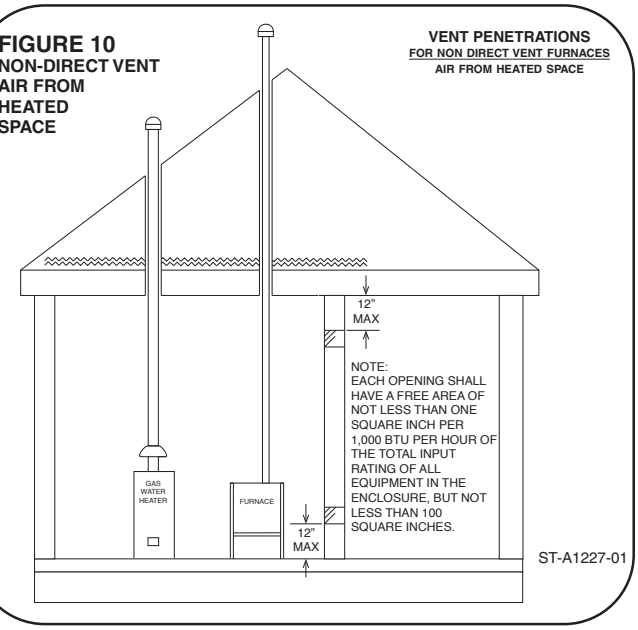

COMBUSTION AND VENTILATION AIR (cont.)

COMBUSTION AIR REQUIREMENTS: CONFINED AND UNCONFINED SPACES

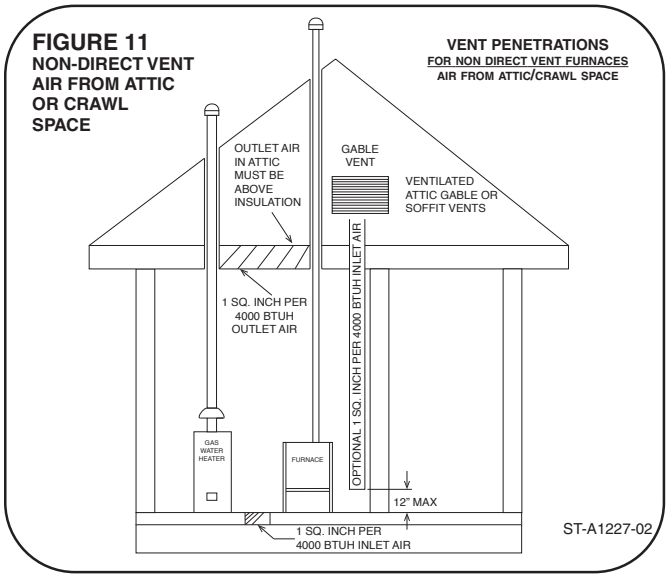

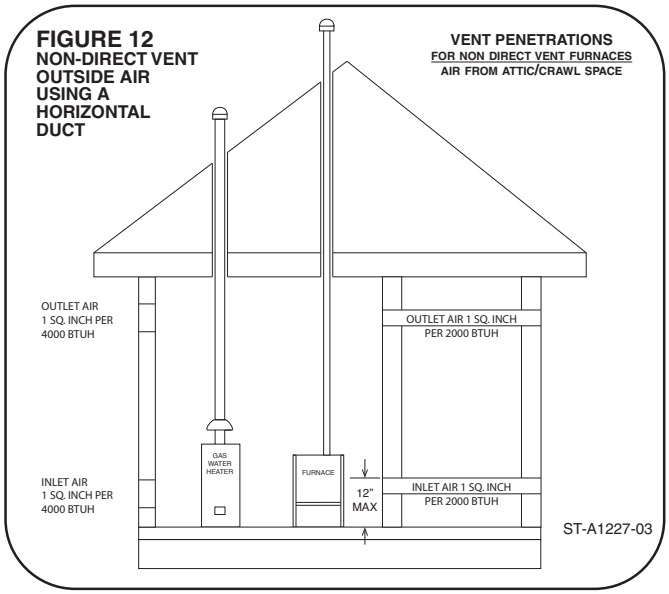

A. 1 Square inch for each 3,000 BTUH of the total input rating of all equipment located in the enclosure

and

B. Not less than the sum of the areas of all vent connectors in the confined space.

If the unit is installed where there is an exhaust fan, sufficient ventilation must be provided to prevent the exhaust fan from creating negative pressure.

AIR INTAKE PIPE CONNECTION

A double-elbow may be installed to top inlet air opening, BUT IS NOT REQUIRED. This will help to prevent accidental blockage of the intake opening. Reference Figure 13 for proper elbow diameter.

NOTE: Inlet is specifically designed to prevent material from being pulled into furnace. If elbows are not used, the intake opening must be kept clean and free of debris.

FIGURE 13
COMBUSTION AIR FITTING – NON-ATTIC COMBUSTION AIR PULL

ATTACH OPTIONAL DOUBLE ELBOW TO TOP INLET AIR OPENING TO PREVENT ACCIDENTAL BLOCKAGE OF INTAKE OPENING. THIS IS NOT A REQUIREMENT. (SEE PREVIOUS PAGE.) SINGLE ELBOW IS ALLOWED BUT MAY NOT PREVENT DEBRIS FROM BEING DROPPED INTO THE FURNACE.

FURNACE BTU/H	DIA. OF PVC
50,000	2"
75,000	3"
100,000	3"
125,000	3"
150,000	3"

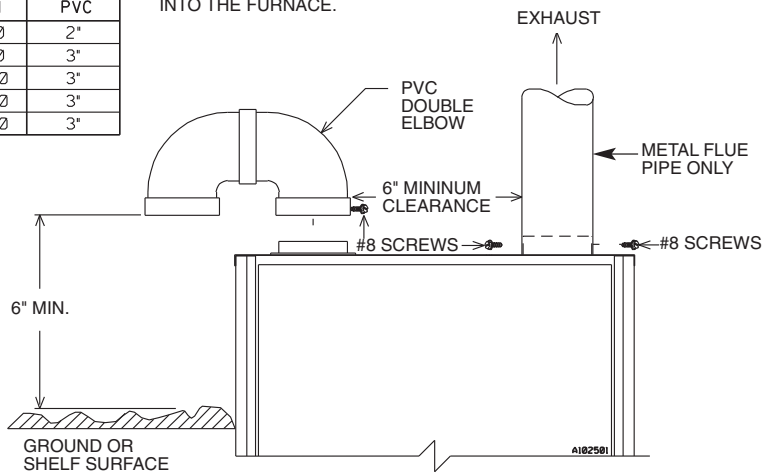

COMBUSTION AND VENTILATION AIR (cont.)

It is also acceptable to run the condensate drain (or refrigerant) line access over the air intake hole as long as a 1" minimum clearance is maintained.

Combustion air openings must not be restricted in any manner.

IMPORTANT: When indoor combustion air is used, the inlet air opening at the furnace must be protected from accidental blockage.

IMPORTANT: *If the furnace is in a location with an exhaust fan, there must be sufficient ventilation to prevent the exhaust fan from creating a negative pressure in the room.*

Combustion air openings must **NOT BE RESTRICTED** in any manner.

CONSULT LOCAL CODES FOR SPECIAL REQUIREMENTS.

B: Method 3

For the optimum in quiet operation, attic air may be brought directly to the furnace.

IMPORTANT: In applications using Method 3 for combustion air, the attic must be ventilated by gable or soffit vents.

⚠ CAUTION

COMBUSTION AIR INTAKES CANNOT BE TERMINATED OUTSIDE. DOING SO CAN CAUSE IMPROPER OPERATION OF THE FURNACE.

COMBUSTION AIR FROM ATTIC

If attic combustion air is used, the inlet air opening at the furnace must be protected from accidental blockage. Install a 90° elbow pointing horizontally at the top of inlet air pipe. See Figure 14 (maximum of 2, 45° or 90° elbows, allowed).

NOTE: Maximum length of pipe that may be used for combustion air is 10 feet with two elbows. Lengths of more than 10 feet can result in nuisance pressure switch trips.

FIGURE 14
COMBUSTION AIR FITTING – OPTIONAL ATTIC COMBUSTION AIR PULL

FURNACE BTU/H	DIA. OF PVC
50,000	2"
75,000	3"
100,000	3"
125,000	3"
150,000	3"

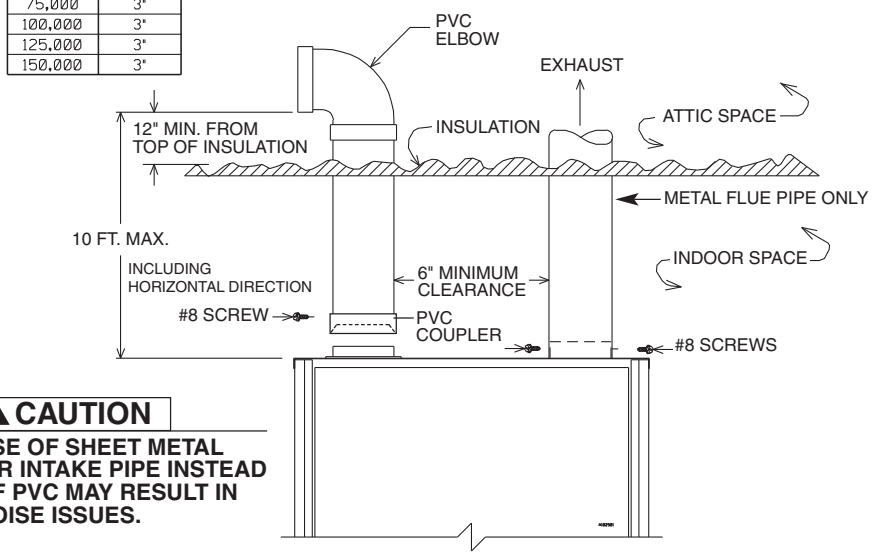

⚠ CAUTION

USE OF SHEET METAL AIR INTAKE PIPE INSTEAD OF PVC MAY RESULT IN NOISE ISSUES.

VENTING

GENERAL INFORMATION

The furnace must be vented in accordance with these instructions, National Fuel Gas Code, ANSI Z223.1 and requirements or codes of the local utility or other authority having jurisdiction.

⚠ WARNING

DEVICES ATTACHED TO THE FLUE OR VENT FOR THE PURPOSE OF REDUCING HEAT LOSS UP THE CHIMNEY HAVE NOT BEEN TESTED AND HAVE NOT BEEN INCLUDED IN THE DESIGN CERTIFICATION OF THIS FURNACE. WE, THE MANUFACTURER, CANNOT AND WILL NOT BE RESPONSIBLE FOR INJURY OR DAMAGE CAUSED BY THE USE OF SUCH UNTESTED AND/OR UNCERTIFIED DEVICES, ACCESSORIES OR COMPONENTS.

DRAFT INDUCER

⚠ WARNING

VENT PIPE ATTACHING HOLES MUST BE PREDRILLED IN THE DRAFT INDUCER COLLAR TO PREVENT DAMAGING THE INDUCER. DRILL 1/8" DIAMETER HOLES THROUGH THE VENT PIPE AND COLLAR AND USE #8 SCREWS TO ATTACH. SEE FIGURE 16. FAILURE TO FOLLOW THIS WARNING CAN CAUSE RECIRCULATION OF FLUE PRODUCTS CAUSING CARBON MONOXIDE POISONING RESULTING IN PERSONAL INJURY OR DEATH.

FURNACE CATEGORY INFORMATION

This furnace is shipped as a Category I type induced draft furnace. A Category I furnace operates with a nonpositive vent pressure and has a vent gas temperature at least 140°F above the dew point of the vent gases. A Category I type may be a draft hood equipped furnace or have a fan assisted combustion system (induced draft). The inducer is used to pull flue products through the combustion chamber and as they leave the furnace, most of the energy has been dissipated. The buoyant effect of the flue gases provides venting to the outdoors.

During the off cycle, the inducer is off and there is very little flow through the vent, cooling the vent. During the on cycle there is no dilution airflow, as with a draft hood type furnace. Although the vent heats up rapidly without dilution air, the flue products contain more water vapor, which results in a higher dew point temperature. It is most **important** that you follow the guidelines in these instructions to prevent the possible formation of condensation in the venting system.

As a Category I furnace it may be vented vertically with type B-1 vent pipe and also may be common vented, as described in these instructions.

IMPORTANT APPLICATION NOTES

When the furnace is used as a replacement, the existing vent system should be inspected to assure that there are no obstructions, blockage, or any signs of corrosion and is properly sized for use with this furnace.

NOTE: When the vent table permits more than one diameter of pipe for a connector or vent, the smallest permitted diameter must be used.

Vent pipe may be type "B-1," either rigid or suitable flexible construction that carries a U.L. listing.

Common venting is allowed with vertical B-1 vent systems, and lined masonry chimneys. Follow the National Fuel Gas Code, ANSI Z223.1.

NOTE: Follow combustion air instructions as outlined in this manual.

Single wall vent connectors to "B-1 vent or masonry chimneys" may be used under the guidelines of the National Fuel Gas Code, ANSI Z223.1.

The entire length of the vent connector shall be readily accessible for inspection, cleaning and replacement.

"B-1" VERTICAL VENTING

NOTE: Refer to the National Fuel Gas Code, ANSI Z223.1.

Type "B-1" vents must be installed in accordance with the terms of their listings and the vent manufacturer's instructions.

"B-1" vents must be supported and spaced in accordance with their listings and the manufacturer's instructions. All vents must be supported to maintain their minimum clearances from combustible material.

VERTICAL VENTING

Input	Categorized Furnace Vent Size Recommended (See NFGC)
50K	3"
75K	*4"
100K	*4"
125K	*5"
150K	*5"

*NOTE: All furnaces have a 3" vent connection as shipped from the factory. A 3" to 4", 3" to 5", or 4" to 5" vent transition may be required when vertically vented or common vented with metal vent pipes. **THE VENT TRANSITION CONNECTION MUST BE MADE AT THE FURNACE VENT EXIT.** It must originate with an adapter if required, at the furnace flue collar and terminate either in a listed cap or roof assembly. When common venting, the vent connector size may differ from the above diameters depending on application. See National Fuel Gas Code ANSI Z223.1 or latest edition tables.

COMBUSTION AND VENTILATION AIR (cont.)

VERTICAL VENT SYSTEMS:

1. A gas vent shall terminate above the roof surface with a listed cap or listed roof assembly. Gas vents 12 inches in size or smaller with listed caps shall be permitted to be terminated in accordance with Figure 15, provided they are at least 8 feet from a vertical wall or similar obstruction. All other gas vents shall terminate not less than 2 feet above the highest point where they pass through the roof and at least 2 feet higher than any portion of a building within 10 feet.
2. A type B-1 gas vent shall terminate at least 5 feet in vertical height above the highest connected equipment draft hood or flue collar.
3. Must rise ¼" per foot away from the furnace on horizontal runs and be supported with straps or hangers so it has no sags or dips. Supports at 4 foot intervals and at all elbows are recommended.
4. The vent connector must be mechanically fastened to the outlet collar of the furnace with at least (2) sheet metal screws except vent connectors that are B-1 material. These shall be assembled in accordance with the manufacturer's instructions. See Figures 16 and 17.
5. Any angle greater than 45 degrees from the vertical is considered horizontal. The total horizontal distance of a vent plus the horizontal vent connector serving draft-hood equipped appliances shall not be greater than 75 percent of the vertical height of the vent.

Single appliance venting of a fan assisted furnace into a tile-lined masonry chimney is prohibited. The chimney must be lined with either Type B vent or with a listed, single wall, metal lining system. Reference National Fuel Gas Code, ANSI Z223.1. See Figure 18 for typical B-1 vent chase.

NOTE: A chimney adapter is available as an accessory (see accessory section of this manual). Follow manufacturer's instructions.

⚠ WARNING

DO NOT CONNECT THIS FURNACE TO A CHIMNEY USED TO VENT A SOLID FUEL APPLIANCE (WOOD OR COAL). VENTING WITH A SOLID FUEL APPLIANCE CAN LEAD TO IMPROPER FUNCTIONING OF THE UNIT, AND DUE TO SOOTING, THE POSSIBILITY OF FIRE RESULTING IN PROPERTY DAMAGE, PERSONAL INJURY OR DEATH.

SPECIAL VENT SYSTEMS (SVS)

IMPORTANT: *It is THE FURNACE MANUFACTURER's position now that new installations of any HTPV pipe used in a category III vent application, including Selkirk's Selvent™ II HTPV product, should cease immediately.*

FIGURE 15
TYPICAL VENTING WITH "B-1" VENT

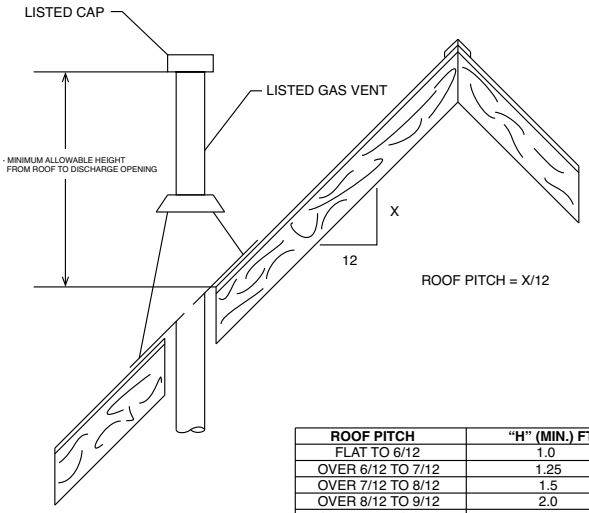

ROOF PITCH	"H" (MIN.) FT.
FLAT TO 6/12	1.0
OVER 6/12 TO 7/12	1.25
OVER 7/12 TO 8/12	1.5
OVER 8/12 TO 9/12	2.0
OVER 9/12 TO 10/12	2.5
OVER 10/12 TO 11/12	3.25
OVER 11/12 TO 12/12	4.0
OVER 12/12 TO 14/12	5.0
OVER 14/12 TO 16/12	6.0
OVER 16/12 TO 18/12	7.0
OVER 18/12 TO 20/12	7.5
OVER 20/12 TO 21/12	8.0

ST-A1220-24

FIGURE 16
ATTACHING TO DRAFT INDUCER COLLAR

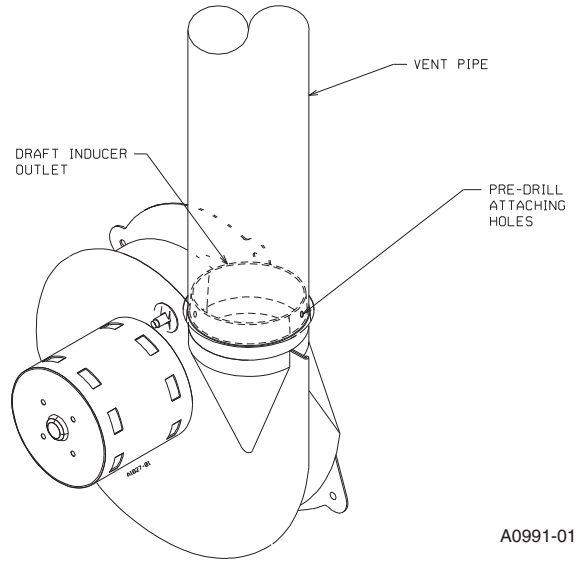

A0991-01

COMBUSTION AND VENTILATION AIR (cont.)

FIGURE 17

1. STANDARD 3" FLUE CONNECTION.
2. 4" ADAPTER - OPTIONAL

SEE NATIONAL FUEL GAS CODE FOR SIZING OPTIONS

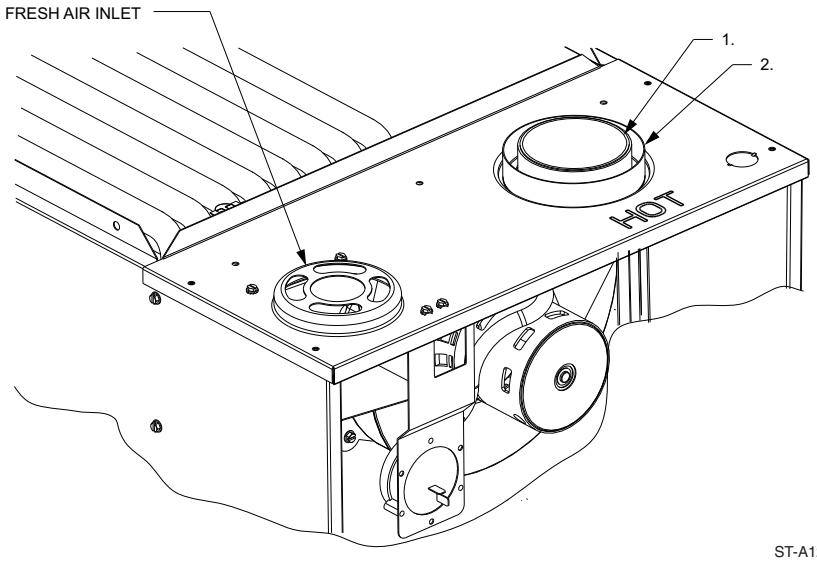

ST-A1220-09

FIGURE 18
DEDICATED VENTING THROUGH CHIMNEY WITH "B-1" VENT

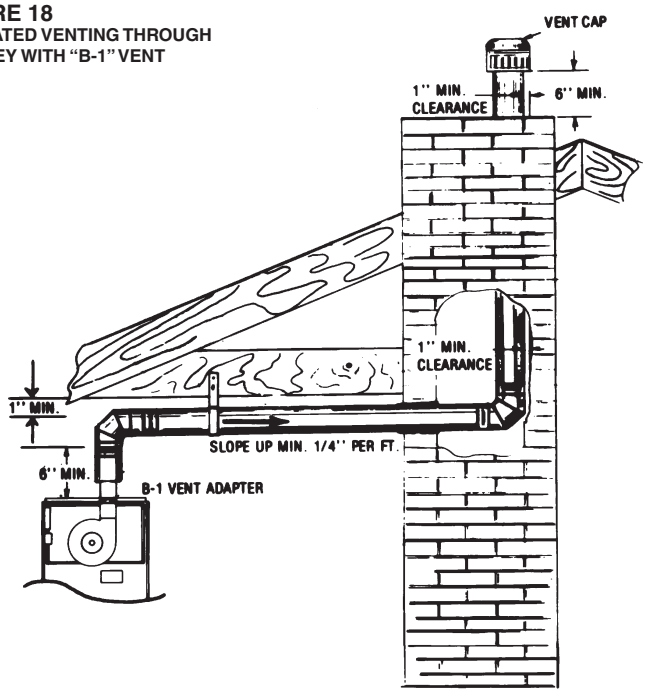

COMBUSTION AND VENTILATION AIR (cont.)

POWER VENT SYSTEMS

When vertical venting is not possible, the only acceptable method for horizontal venting is with the use of Tjernlund model GPAK-1TR or Field Controls models SWG-4R power venter. Type B vent pipe and fittings must be used. Common venting is not permitted

All application and installation instructions supplied with the power venter must be followed.

Please address all questions regarding power venter installation, agency listings and furnace model compatibility to:

Tjernlund Products, Inc.
(800) 255-4208 or (612) 426-2993

Field Controls L.L.C.
(800) 742-8368 or (919) 522-0214

EXISTING VENT SYSTEMS

IMPORTANT RETROFIT VENTING INSTRUCTIONS

If this furnace is a replacement installation, **ALWAYS INSPECT** the existing vent system to be sure there are no obstructions, blockages, or signs of corrosion.

When the existing furnace is removed from a venting system serving other appliances, the venting is likely to be too large to properly vent the remaining attached appliances.

The following steps shall be followed with each appliance that remains connected to the common venting system, while the other appliances that remain connected to the common venting systems are not in operation.

NOTE: When the vent table permits more than one diameter of pipe for a connector or vent, the smallest permitted diameter must be used.1. Seal any unused openings in the common venting system.

NOTE: Ensure existing venting system complies with latest addition of National Fuel Gas Code ANSI Z223.1 and all local codes/regulations.

1. Visually inspect the venting system for proper size and horizontal pitch and determine that there is no blockage, restriction, leakage, corrosion or other deficiencies which could cause an unsafe condition.
2. Insofar as is practical, close all building doors, windows and all doors between the space where the appliances remaining connected to the common venting system are located. Turn on clothes dryers and any appliance not connected to the common venting system. Turn on any exhaust fans, such as range hoods and bathroom exhausts, so they will operate at maximum speed. Do not operate a summer exhaust fan. Close fireplace dampers.
3. Follow the lighting instructions. Place the appliance being inspected into operation. Adjust the thermostat so the appliance will operate continuously.
4. Test for spillage at the draft hood relief opening after 5 minutes of main burner operation. Use the flame of a match or candle, or smoke from a cigarette, cigar, or pipe.
5. After it has been determined that each appliance that remains connected to the common venting system properly vents (when tested as outlined above) return doors, windows, exhaust fans, fireplace dampers and any other gas-burning appliance to their previous conditions of use.
6. If improper venting is observed during any of the above tests, the common venting system must be resized. Refer to National Fuel Gas Code, ANSI Z223.1.

GAS SUPPLY AND PIPING

IMPORTANT SAFETY INFORMATION

NATURAL GAS AND PROPANE (LIQUEFIED PETROLEUM GAS / LPG) SAFETY

GAS SUPPLY

⚠ WARNING

- FURNACES USING PROPANE GAS ARE DIFFERENT FROM NATURAL GAS MODELS. A NATURAL GAS HEATER WILL NOT FUNCTION SAFELY ON PROPANE AND VICE VERSA. CONVERSIONS OF HEATER GAS TYPE SHOULD ONLY BE MADE BY QUALIFIED INSTALLERS USING FACTORY SUPPLIED COMPONENTS. THE FURNACE SHOULD ONLY USE THE FUEL TYPE IN ACCORDANCE WITH LISTING ON RATING PLATE. ANY OTHER FUEL USAGE WILL RESULT IN DEATH OR SERIOUS PERSONAL INJURY FROM FIRE AND/OR EXPLOSION.
- BOTH NATURAL GAS AND PROPANE HAVE AN ODORANT ADDED TO AID IN DETECTING A GAS LEAK. SOME PEOPLE MAY NOT PHYSICALLY BE ABLE TO SMELL OR RECOGNIZE THIS ODORANT. IF YOU ARE UNSURE OR UNFAMILIAR WITH THE SMELL OF NATURAL GAS OR PROPANE, ASK YOUR LOCAL GAS SUPPLIER. OTHER CONDITIONS, SUCH AS "ODORANT FADE," WHICH CAUSES THE ODORANT TO DIMINISH IN INTENSITY, CAN ALSO HIDE, CAMOUFLAGE, OR OTHERWISE MAKE DETECTING A GAS LEAK BY SMELL MORE DIFFICULT.
- UL OR CSA RECOGNIZED FUEL GAS DETECTORS ARE RECOMMENDED IN ALL ENCLOSED PROPANE AND NATURAL GAS APPLICATIONS WHEREIN THERE IS A POTENTIAL FOR AN EXPLOSIVE MIXTURE OF FUEL GAS TO ACCUMULATE. FUEL DETECTOR INSTALLATION SHOULD BE IN ACCORDANCE WITH THE DETECTOR MANUFACTURER'S RECOMMENDATIONS AND/OR LOCAL LAWS, RULES, REGULATIONS, OR CUSTOMS.
- BEFORE ATTEMPTING TO LIGHT THE FURNACE, MAKE SURE TO LOOK AND SMELL FOR GAS LEAKS. USE A SOAPY SOLUTION TO CHECK ALL GAS FITTINGS AND CONNECTIONS.

BUBBLING AT A CONNECTION INDICATES A LEAK THAT MUST BE CORRECTED. WHEN SMELLING TO DETECT A GAS LEAK, BE SURE TO ALSO SNIFF NEAR THE FLOOR. PROPANE GAS IS HEAVIER THAN AIR AND TENDS TO COLLECT AT LOWER LEVELS MAKING IT MORE DIFFICULT TO SMELL AT NOSE LEVEL. NATURAL GAS IS LIGHTER THAN AIR

(Continued on next column)

AND WILL RISE, POSSIBLY ACCUMULATING IN HIGHER PORTIONS OF THE STRUCTURE.

- IF A GAS LEAK IS PRESENT OR SUSPECTED:
  - DO NOT ATTEMPT TO FIND THE CAUSE YOURSELF.
  - NEVER USE AN OPEN FLAME TO TEST FOR GAS LEAKS. THE GAS CAN IGNITE RESULTING IN DEATH, PERSONAL INJURY, OR PROPERTY DAMAGE.
  - DO NOT TRY TO LIGHT ANY APPLIANCE.
  - DO NOT TOUCH AND ELECTRICAL SWITCH.
  - DO NOT USE ANY PHONE IN YOUR BUILDING.
  - LEAVE THE BUILDING IMMEDIATELY AND CALL THE GAS SUPPLIER FROM A NEIGHBOR'S PHONE. FOLLOW THE GAS SUPPLIER'S INTRUCTIONS.
  - IF YOU CANNOT REACH YOUR GAS SUPPLIER, CALL THE FIRE DEPARTMENT.
  - DO NOT RETURN TO THE BUILDING UNTIL AUTHORIZED BY THE GAS SUPPLIER OR FIRE DEPARTMENT.
- SHOULD OVERHEATING OCCUR OR THE GAS SUPPLY FAIL TO SHUT OFF, TURN OFF THE MANUAL GAS CONTROL VALVE TO THE FURNACE.
- CONSULT WITH THE LOCAL BUILDING DEPARTMENT AND FUEL GAS SUPPLIER BEFORE INSTALLING THE HEATER:
  - THE INSTALLATION AND PURGING OF GAS PIPING MUST CONFORM TO LOCAL CODES, UTILITY COMPANY REQUIREMENTS, AND THE LATEST EDITION OF NATIONAL FUEL GAS CODE (NFGC) - ANSI Z223.1/NFPA 54.
  - LP FURNACES SHOULD NOT BE INSTALLED BELOW GRADE (IN A BASEMENT FOR EXAMPLE) IF SUCH INSTALLATION IS PROHIBITED BY FEDERAL, STATE, PROVINCIAL, AND/OR LOCAL LAWS, RULES, REGULATIONS, OR CUSTOMS.
  - INSTALLATION OF A GAS PRESSURE REGULATOR MAY BE REQUIRED IN THE GAS SUPPLY LINE. THE REGULATOR SHOULD NOT EXCEED THE MAXIMUM SUPPLY PRESSURE LISTED ON THE FURNACE RATING PLATE. DO NOT USE AN INDUSTRIAL-TYPE GAS REGULATOR.
  - FOLLOW ALL LOCAL CODES AND SECTION 8.3 OF NFGC WITH REGARD TO PURGING OF GAS PIPING TO ENSURE THAT THE AIR AND/OR FUEL GAS IN THE GAS PIPING IS PROPERLY VENTED TO A LOCATION WHERE AN EXPLOSIVE MIXTURE CANNOT ACCUMULATE.

GAS SUPPLY

GAS PIPING

⚠ WARNING

THIS FURNACE IS EQUIPPED AT THE FACTORY FOR USE ON NATURAL GAS ONLY. CONVERSION TO LP GAS REQUIRES A SPECIAL KIT IS AVAILABLE AT THE DISTRIBUTOR. FAILURE TO USE THE PROPER CONVERSION KIT CAN CAUSE FIRE, CARBON MONOXIDE POISONING, EXPLOSION, PROPERTY DAMAGE, PERSONAL INJURY OR DEATH. SEE THE CONVERSION KIT INDEX SUPPLIED WITH THE FURNACE. THIS INDEX IDENTIFIES THE PROPER LP GAS CONVERSION KIT REQUIRED FOR EACH PARTICULAR FURNACE.

IMPORTANT: *Any additions, changes or conversions required for the furnace to satisfactorily meet the application should be made by a qualified installer, service agency or the gas supplier, using factory-specified or approved parts.*

IMPORTANT: *Connect this furnace only to gas supplied by a commercial utility or commercial fuel provider.*

IMPORTANT: *A U.L. or CSA recognized fuel gas and CO detector(s) are recommended in all applications, and their installation should be in accordance with the detector manufacturer's recommendations and/or local laws, rules, regulations or customs.*

Install the gas piping according to all local codes, state codes and regulations of the utility company, whichever holds jurisdiction.

If possible, run a separate gas supply line directly from the meter to the furnace. Consult the local gas company for the location of the manual main shut-off valve. **The gas line and manual gas valve must be adequate in size to prevent undue pressure drop and never smaller than the pipe size to the combination gas valve on the furnace.** Refer to Table 6 for the recommended pipe size for natural gas and Table 7 for LP gas pipe sizes.

IMPORTANT: *It is permissible to run flexible gas connector inside the unit to a piece of black pipe. If local codes allow the use of a flexible gas appliance connector, always use a new listed connector. Do not use a connector which has previously serviced another gas appliance. Massachusetts law limits flexible gas connectors to a maximum of 36".*

Install a ground joint union outside the cabinet and within 3 feet to easily remove the control valve assembly. Install a manual shut-off valve in the gas line outside the furnace casing. The valve should be readily accessible to turn the gas supply on or off. Install a drip leg in the gas supply line as close to the furnace as possible. Always use a pipe compound resistant to the action of liquefied petroleum gases on all threaded connections.

IMPORTANT: *When making gas pipe connections, use a back-up wrench to prevent any twisting of the control assembly and gas valve. Do not overtighten the connection.*

Any strains on the gas valve can change the position of the gas orifices in the burners. This can cause erratic furnace operation.

IMPORTANT: *ENSURE that the furnace gas control valve not be subjected to high gas line supply pressures.*

DISCONNECT the furnace and its individual shut-off valve from the gas supply piping during **any pressure testing that exceeds 1/2 PSIG (3.48 kPa).**

FIGURE 19
GAS PIPING INSTALLATION

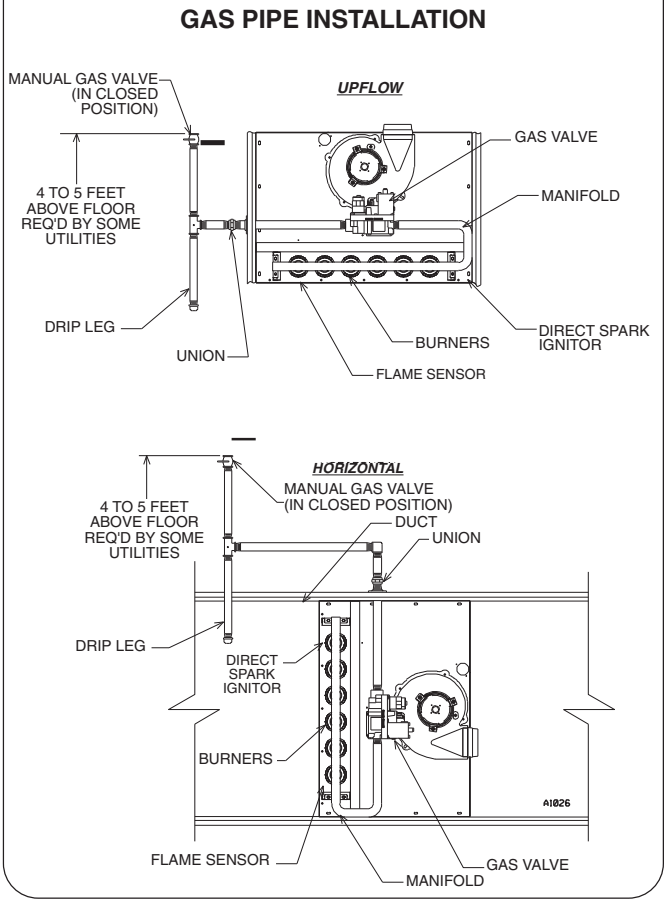

GAS PRESSURE

IMPORTANT: ENSURE that the furnace gas valve is not to be subjected to high gas line supply pressures.

DISCONNECT the furnace and its individual manual gas stop from the gas supply piping during **any pressure testing that exceeds 1/2 PSIG. (3.48 kPa).**

Natural gas supply pressure must be 5" to 10.5" w.c. LP gas supply pressure must be 11" to 13" w.c. **This pressure must be maintained with all other gas-fired appliances in operation.**

The minimum gas supply pressure to the gas valve for proper furnace input adjustments is 5" w.c. for natural gas, however 6" to 7" is recommended. The minimum gas supply pressure is 11" w.c. for LP gas.

⚠ CAUTION

ELEVATIONS ABOVE 2000 FT. REQUIRE THAT THE FURNACE INPUT RATING BE ADJUSTED AND THAT THE SIZE OF THE BURNER ORIFICES BE RECALCULATED BASED ON ELEVATION AND GAS HEATING VALUE. THE BURNER ORIFICES MAY (OR MAY NOT) NEED TO BE CHANGED. SEE THE SECTION TITLED "HIGH ALTITUDE INSTALLATIONS" OF THIS BOOK FOR INSTRUCTIONS.

FIGURE 20
TYPICAL GAS VALVE (WHITE RODGERS)

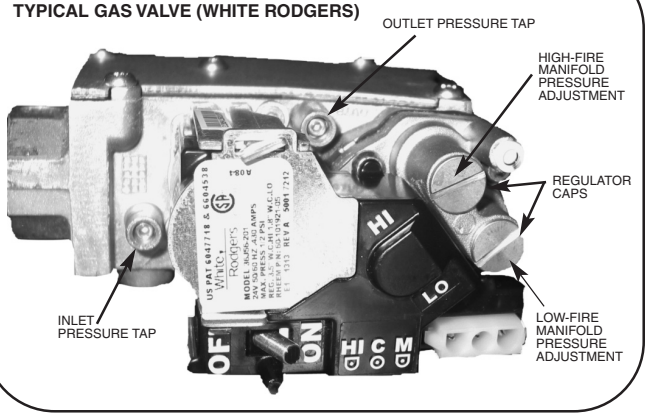

⚠ WARNING

NEVER PURGE A GAS LINE INTO THE COMBUSTION CHAMBER. NEVER USE MATCHES, FLAME OR ANY IGNITION SOURCE FOR CHECKING LEAKAGE. FAILURE TO ADHERE TO THIS WARNING CAN CAUSE A FIRE OR EXPLOSION RESULTING IN PROPERTY DAMAGE, PERSONAL INJURY OR DEATH.

TO CHECK FOR GAS LEAKAGE, USE AN APPROVED CHLORIDE-FREE SOAP AND WATER SOLUTION, OR OTHER APPROVED METHOD.

GAS VALVE

This furnace has a 24-volt gas valve. It has ports for measuring supply and manifold gas pressure. The valve body contains a pressure regulator to maintain proper manifold gas pressure.

A control switch is on the valve body. It can be set to only the **"ON"** or **"OFF"** positions. The gas valve is a slow-opening valve. See Figure 20.

When energized, it takes 2 to 3 seconds to fully open.

TABLE 6
NATURAL GAS PIPE CAPACITY TABLE (CU. FT./HR.)

Capacity of gas pipe of different diameters and lengths in cu. ft. per hr. with pressure drop of 0.3 in. and specific gravity of 0.60 (natural gas).

Nominal Iron Pipe Size, Inches	Length of Pipe, Feet							
	10	20	30	40	50	60	70	80
1/2	132	92	73	63	56	50	46	43
3/4	278	190	152	130	115	105	96	90
1	520	350	285	245	215	195	180	170
1-1/4	1,050	730	590	500	440	400	370	350
1-1/2	1,600	1,100	890	760	670	610	560	530

After the length of pipe has been determined, select the pipe size which will provide the minimum cubic feet per hour required for the gas input rating of the furnace. By formula:

$$\text{Cu. Ft. Per Hr. Required} = \frac{\text{Gas Input of Furnace (BTU/HR)}}{\text{Heating Value of Gas (BTU/FT}^3\text{)}}$$

The gas input of the furnace is marked on the furnace rating plate. The heating value of the gas (BTU/FT^3) may be determined by consulting the local natural gas utility or the LP gas supplier.

GAS SUPPLY (cont.)

GAS PRESSURE

SETTING GAS PRESSURE

The maximum gas supply pressure to the furnace must not exceed 10.5" w.c. natural gas, or 13" w.c. LP gas. The minimum supply gas pressure to the gas valve should be 5″ w.c. natural gas or 11″ w.c. LP gas. A properly calibrated manometer is required for accurate gas pressure measurements.

SUPPLY GAS PRESSURE MEASUREMENT

An inlet pressure tap is on the input side of the gas valve.

1. With gas shut off to the furnace at the manual gas valve outside the unit.
2. Loosen (do NOT remove) the inlet pressure tap using a 3/32″ allen-head wrench (see Figure 20).
3. Connect a manometer to the pressure tap. The pressure tap requires a 5/16″ I.D. hose.

   A kit is available from Prostock Replacement Parts which includes the following:

   A. 3/32″ allen-head wrench
   B. 5/16″ to 1/4″ hose reducer fitting
   C. Short piece of 5/16″ I.D. hose
   Kit part number is: F0092-100300S1
4. Turn on the gas supply and operate the furnace and all other gas-fired units on the same gas line as the furnace.
5. Note or adjust the line gas pressure to give:

   A. 5″ - 10.5″ w.c. for natural gas.

   B. 11″ - 13″ w.c. for LP gas.
6. Shut off the gas at the manual gas valve and remove the manometer and hose.
7. Tighten the allen-head screw in the inlet pressure tap using a 3/32″ allen-head wrench (see Figure 20).
8. Turn on the gas supply and check for gas leaks using an approved leak detector. Do NOT use a flame of any kind to check for leaks. Repair any leaks and repeat.

If the supply gas line pressure is above these ranges, install an in-line gas regulator to the furnace for natural gas units. With LP gas, have the LP supplier reduce the line pressure at the regulator.

If supply gas line pressure is below these ranges, either remove any restrictions in the gas supply piping or enlarge the gas pipe. See Tables 6 and 7. With LP gas, have the LP supplier adjust the line pressure at the regulator.

⚠ CAUTION

ELEVATIONS ABOVE 2000 FT. REQUIRE THAT THE FURNACE INPUT RATING BE ADJUSTED AND THAT THE SIZE OF THE BURNER ORIFICES BE RECALCULATED BASED ON ELEVATION AND GAS HEATING VALUE. THE BURNER ORIFICES MAY (OR MAY NOT) NEED TO BE CHANGED. SEE THE SECTION TITLED "HIGH ALTITUDE INSTALLATIONS" OF THIS BOOK FOR INSTRUCTIONS.

Manifold Gas Pressure Measurement. Natural gas manifold pressure should be 3.5" w.c. for high fire and 1.8" w.c. for low fire. LP gas manifold pressure should be 10.0" w.c. for high fire and 4.9" w.c. for low fire. Only small variations in gas pressure should be made by adjusting the pressure regulator.

1. With the gas to the unit shut off at the manual gas valve, remove the outlet pressure tap plug.
2. Loosen (do NOT remove) the outlet pressure tap plug using a 3/32″ allen-head wrench (see Figure 20).
3. Connect a manometer to this pressure tap. The pressure tap requires a 5/16″ I.D. hose.

   A kit is available from Prostock Replacement Parts which includes the following:

   A. 3/32″ allen-head wrench
   B. 5/16″ to 1/4″ hose reducer fitting
   C. Short piece of 5/16″ I.D. hose
   Kit part number is: F0092-100300S1
4. Turn on the gas supply and operate the furnace (apply a heat call).
5. Note or adjust the manifold gas pressure to give:

   A. 3.5″ w.c. high fire/1.8″ w.c. low fire natural gas.

   B. 10.0″ w.c. high fire/4.9″ w.c. low fire L.P. gas.
6. To adjust the pressure regulators, remove the regulator caps. (See Figure 20.)
7. Turn the adjustment screw clockwise to increase pressure, or counterclockwise to decrease pressure.
8. Securely replace the regulator caps.
9. Shut off gas at the manual gas valve and remove the manometer and hose.
10. Tighten the allen-head screw in the inlet pressure tap using a 3/32″ allen-head wrench (see Figure 20).
11. Turn on the gas supply and apply a heat call to the furnace then check for gas leaks using an approved leak detector. Do NOT use a flame of any kind to check for leaks. Repair any leaks and repeat.

LP CONVERSION

NOTE: The valve can be converted to use liquified petroleum (LP) gas by replacing the pressure regulator spring with the conversion kit spring. This LP kit spring allows the regulator to maintain the proper manifold pressure for LP gas. See Figure 21.

NOTE: Order the correct LP conversion kit from the furnace manufacturer. Furnace conversion to LP gas must be performed by a qualified installer, service agency or the gas supplier.

NOx MODELS

When converting furnaces equipped with NOx inserts to LP gas, remove the NOx insert assemblies. Steps for removal are listed below:

1. Turn off all electrical power and the gas supply to the furnace.
2. Remove the burner door from the furnace.
3. Remove the burner assembly – **handle with care.**
4. Remove the two screws attaching the NOx insert retainer bracket to the center panel and remove NOx inserts.
5. Put the two screws back into the holes in the center panel.
6. Re-install the burner assembly.
7. Replace burner door.
8. Turn on electrical power and gas supply to the unit.

NOTE: Some NOx models may have one less NOx insert.

ORIFICE INSTALLATION

LP Gas is a manufactured gas that has consistent heating value across most regions.

The Sea Level input should still be reduced by 4% per thousand ft. and the orifice size must be selected based on the reduced input selection chart in High Alt. Instruction Section.

To change orifice spuds for either conversion to LP or for elevation:

1. Shut off the manual main gas valve and remove the gas manifold.
2. Replace the orifice spuds.
3. Reassemble in reverse order.
4. Turn the gas supply back on and check for proper operation and manifold pressure.
5. Attach the notice label alerting the next service technician that the furnace has been converted to LP gas.

⚠ WARNING

LP TANKS FROM LOCAL LP SUPPLIER MUST NOT BE USED TO STORE ANYTHING (SUCH AS FERTILIZER) EXCEPT LP GAS. THIS INCLUDES ALL DELIVERY VESSELS (LP TRUCKS). IF MATERIAL OTHER THAN LP GAS IS USED IN THE SAME VESSELS/TANK AS THE LP GAS, THE LP GAS CAN BECOME CONTAMINATED AND DAMAGE THE FURNACE. THIS WILL VOID THE MANUFACTURER'S WARRANTY. CONTACT THE SUPPLIER TO MAKE SURE FERTILIZER IS NOT USED IN THE SAME TANKS USED TO STORE AND DELIVER LP GAS.

FIGURE 21
TYPICAL LP KIT CONTENTS

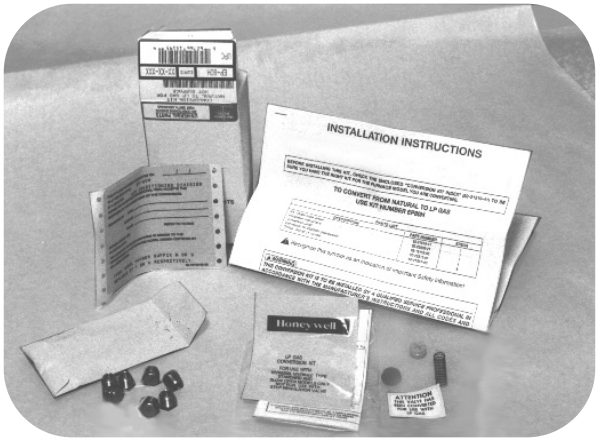

TABLE 7
LP GAS PIPE CAPACITY TABLE (CU. FT./HR.)

Maximum capacity of pipe in thousands of BTU per hour of undiluted liquefied petroleum gases (at 11 inches water column inlet pressure).
(Based on a Pressure Drop of 0.5 Inch Water Column)

Nominal Iron Pipe Size, Inches	Length of Pipe, Feet											
	10	20	30	40	50	60	70	80	90	100	125	150
1/2	275	189	152	129	114	103	96	89	83	78	69	63
3/4	567	393	315	267	237	217	196	182	173	162	146	132
1	1,071	732	590	504	448	409	378	346	322	307	275	252
1-1/4	2,205	1,496	1,212	1,039	913	834	771	724	677	630	567	511
1-1/2	3,307	2,299	1,858	1,559	1,417	1,275	1,181	1,086	1,023	976	866	787
2	6,221	4,331	3,465	2,992	2,646	2,394	2,205	2,047	1,921	1,811	1,606	1,496

Example (LP): Input BTU requirement of unit, 120,000
Equivalent length of pipe, 60 ft. = 3/4" IPS required.

ELECTRICAL WIRING

ELECTRICAL WIRING

⚠ WARNING

TURN OFF ELECTRIC POWER AT FUSE BOX OR SERVICE PANEL BEFORE MAKING ANY ELECTRICAL CONNECTIONS. FAILURE TO DO SO CAN CAUSE ELECTRICAL SHOCK RESULTING IN PERSONAL INJURY OR DEATH.

⚠ WARNING

THE CABINET MUST HAVE AN UNINTERRUPTED GROUND ACCORDING TO THE LATEST EDITION OF THE NATIONAL ELECTRICAL CODE, ANSI/NFPA70- OR LOCAL CODES THAT APPLY. DO NOT USE GAS PIPING AS AN ELECTRICAL GROUND. A GROUND SCREW IS PROVIDED IN THE JUNCTION BOX. FAILURE TO DO SO CAN CAUSE ELECTRICAL SHOCK RESULTING IN PERSONAL INJURY OR DEATH.

⚠ WARNING

THIS FURNACE IS EQUIPPED WITH A BLOWER DOOR SAFETY SWITCH. DO NOT DISABLE THIS SWITCH. FAILURE TO FOLLOW THIS WARNING CAN RESULT IN ELECTRICAL SHOCK, PERSONAL INJURY OR DEATH.

ELECTRICAL CONNECTIONS

Before proceeding with the electrical connections, be certain that the voltage, frequency and phase corresponds to that specified on the furnace rating plate. For single furnace application, maximum over-current protection is 15 amperes.

Use a separate fused branch electrical circuit containing a properly sized fuse or circuit breaker. Run this circuit directly from the main switch box to an electrical disconnect that is readily accessible and located near the furnace (as required by code). Connect from the electrical disconnect to the junction box on the left side of the furnace, inside the blower compartment. For the proper connection, refer to the appropriate wiring diagram located on the inside cover of the furnace control box and in these instructions.

NOTE: The electrical junction box may be moved to the right side if necessary. A knockout is provided. Seal the opposite hole with plug provided.

NOTE: L1 (hot) and L2 (neutral) polarity must be observed when making field connections to the furnace. The ignition control may not sense flame if L1 and L2 are reversed. Make all electrical connections in accordance with the latest edition of the National Electrical Code ANSI/NFPA70.

These may be obtained from:

National Fire Protection Association, Inc.
Batterymarch Park
Quincy, MA 02269

FIGURE 22

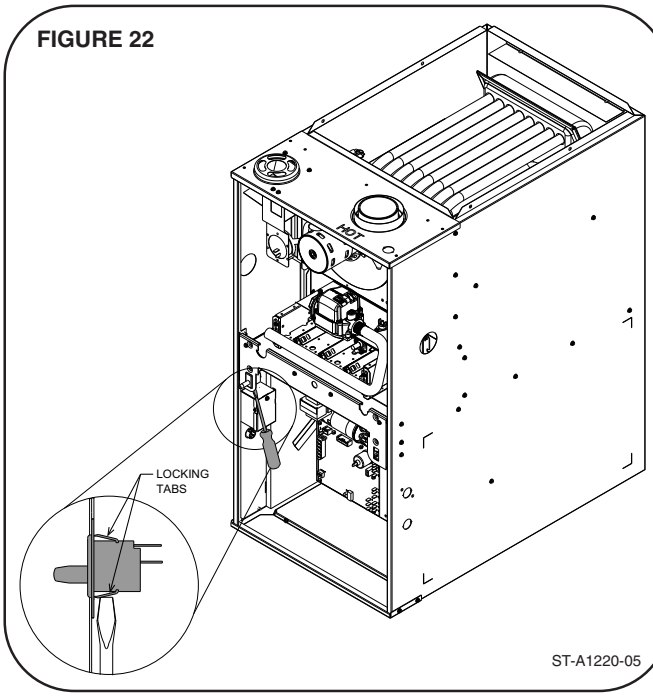

REVERSING THE ELECTRICAL CONNECTION (JUNCTION BOX)

If the line voltage electrical needs to be moved to the opposite side of the furnace, the following steps should be taken:

1. The furnace must NOT be electrically connected to line voltage prior to reversing the electrical connection.
2. Disconnect the wires from the door switch.
3. Remove the junction box from the furnace cabinet wall by removing the two screws that hold it to the cabinet. Leave the wires connected to the junction box.
4. Remove 7/8” plug from hole opposite j-box location. Drill 2 @ 3/16” Ø holes in the jacket. **NOTE:** Dimples/marks are provided in the sheet metal for correct drilling location.
5. Move the junction box to the opposite side of the cabinet. Install using the two screws removed in step 3 above. Note that all screws penetrating the junction box must be blunt – no sharp tipped screws can be used.
6. Replace the plug from the opposite of the furnace (the new j-box location) to the old j-box location and install qty=2 1/4” plugs from parts bag in empty screw holes in old location of j-box into the mounting screw holes in the old junction box location.

REVERSING ELECTRICAL CONNECTION & THERMOSTAT

7. Using a flat screwdriver, squeeze the retaining arms on the door switch and gently pry the door switch from it's opening.
8. Install the door switch in the same opening on the opposite of the furnace and reconnect the electrical connectors (removed in Step 2) to the door switch.

THERMOSTAT

See Field Selections – Dipswitchs for heating "auto staging" options. The room thermostat must be compatible with the furnace. See manufacturer's thermostat spec sheet for compatability concerns. Generally, all thermostats that are not of the "current robbing" type are compatible with the integrated furnace control. The low voltage wiring should be sized as shown.

NOTE: Do not use 24 volt control wiring smaller than No. 18 AWG.

Install the room thermostat in accordance with the instruction sheet packed in the box with the thermostat. Run the thermostat lead wires inside the blower compartment and connect to low voltage terminals as shown on the wiring diagram. Never install the thermostat on an outside wall or where it will be influenced by drafts, concealed hot or cold water pipes or ducts, lighting fixtures, radiation from fireplace, sun rays, lamps, televisions, radios or air streams from registers.

FIGURE 23
TYPICAL THERMOSTAT WIRING

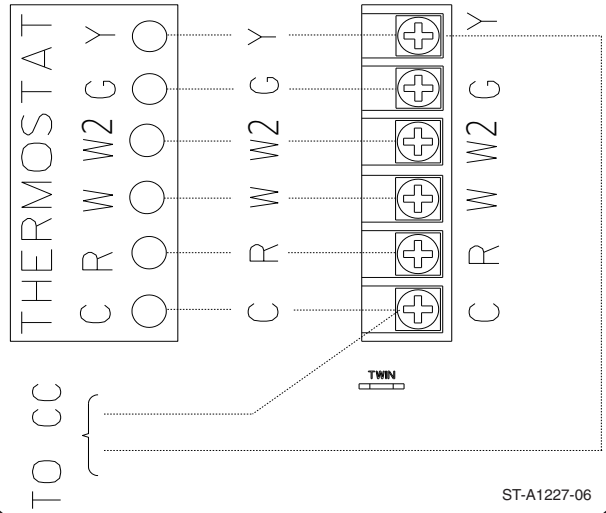

FIGURE 24
ISOLATION RELAY

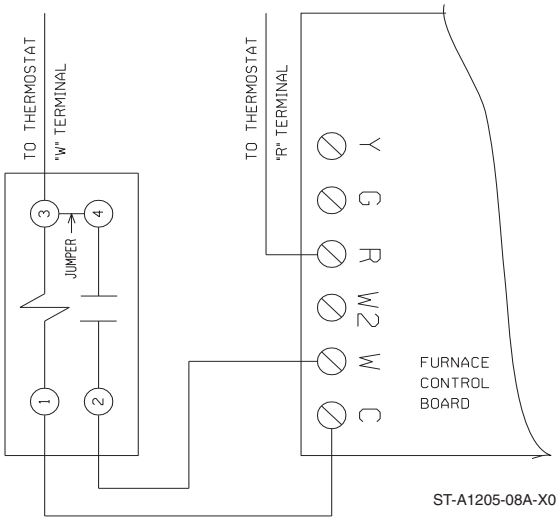

FIGURE 25
LINE VOLTAGE CONNECTIONS

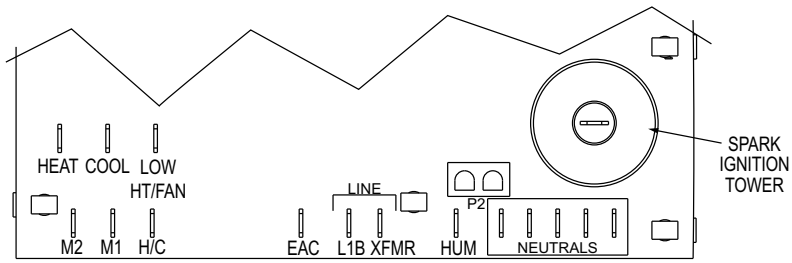

ACCESSORIES

FIELD INSTALLED OPTION ACCESSORIES

ELECTRONIC AIR CLEANER

Line voltage power can be supplied from the terminal labeled “EAC” and a line voltage neutral terminal on the control board. This will power the electronic air cleaner whenever the circulating air blower is in operation.

HUMIDIFIER

Line voltage power is supplied from the terminal labeled “HUM” to a line voltage neutral terminal on the control board. This will power the humidifier whenever the induced draft motor is energized.

NOTE: Maximum current – 1.0 amps for each option (humidifier or electronic air cleaner).

RXGW-C01 4-INCH FLUE ADAPTER (See Figure 26)

Refer to “Venting” section of this manual for more information. **See National Fuel Gas Code for sizing options.**

FIGURE 26

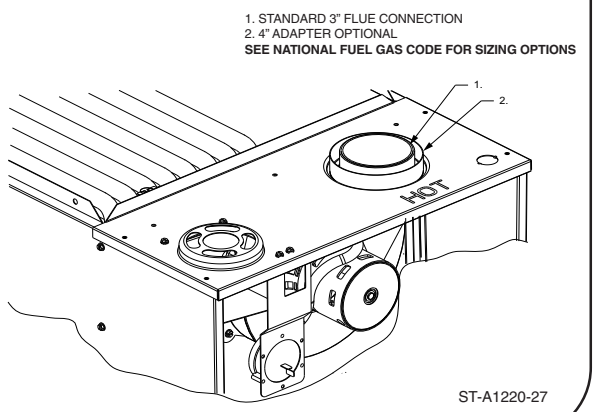

FILTERS (See Figure 27)

Keep filters clean at all times. **A filter is not provided with the furnace, but one must be field-supplied and installed.**

It is recommended to replace the furnace filter periodically to maintain optimum furnace performance.

RXGW-B01 CHIMNEY ADAPTER

IMPORTANT: *CHIMNEY ADAPTER IS CERTIFIED FOR USE ON (-)802P MODELS.*

This appliance is CSA certified for use with RXGW-B01 Chimney Adapter. Refer to Kit Installation Instructions 92-101682-01.

FIELD INSTALLED OPTION ACCESSORIES (cont.)

FIGURE 27
FILTER LOCATIONS

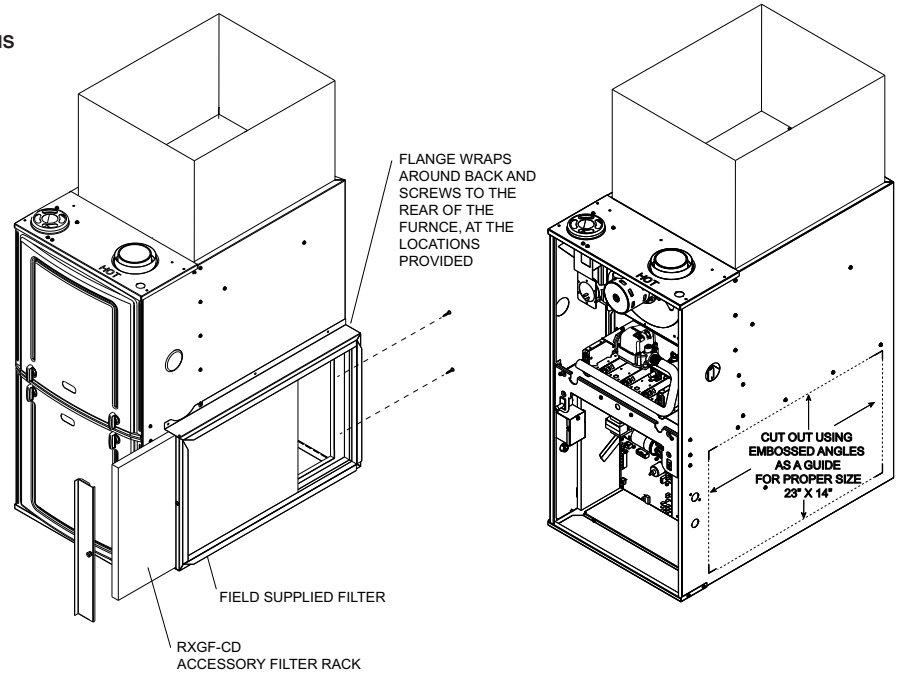

SIDE RETURN

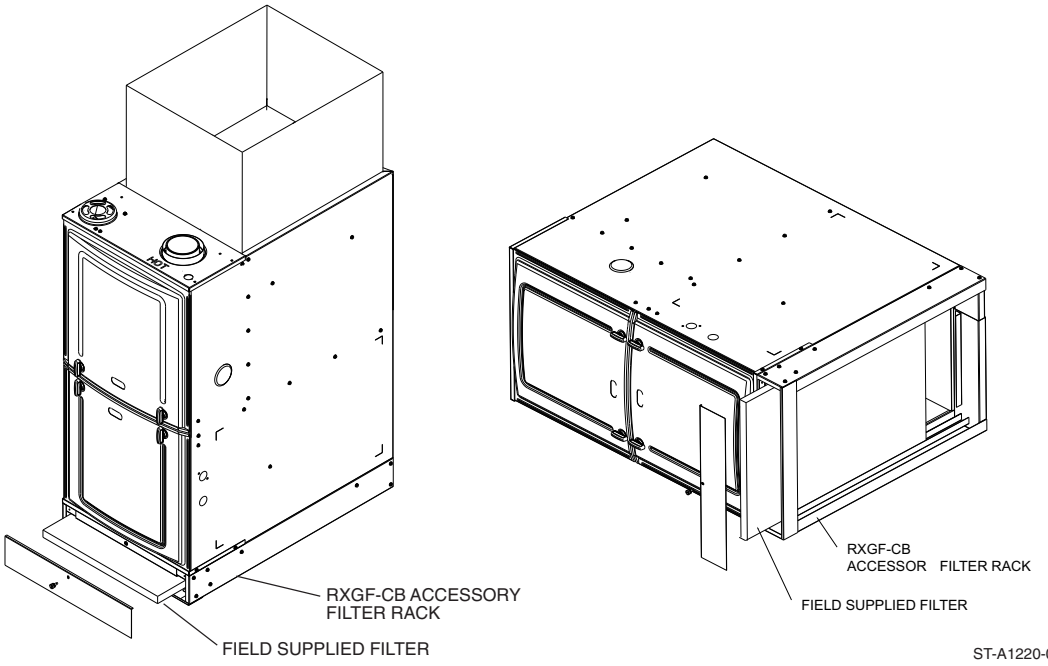

BOTTOM RETURN **HORIZONTAL RETURN**

TWINNING

FURNACE TWINNING INSTALLATIONS

Twinning operation of two furnaces, installed side-by-side, connected by a common duct system with main power supplied by the same source, and controlled by a common thermostat can be done with the UT Electronic Controls 1095-300 integrated control boards.

IMPORTANT: Only twin furnaces with identical control boards.

IMPORTANT: Only bottom returns can be used. No more than two furnaces can share the same supply and return. Furnaces must have same heating and blower capacity. Twinning furnaces must operate off the same phase of power.

It should be noted that both blowers will run simultaneously when there is a call for heating, cooling or fan.

NOTE: Duct system must be adequate to provide correct airflow to each furnace for supply and return.

UT ELECTRONIC CONTROLS 1095-300 CONTROL BOARD (62-104059-01)

1. Single Stage Operation
   a. Control board “ONE” is on furnace connected to the thermostat.
   b. The 24 VAC supply to both control boards must be in phase with each other.
   c. Connect the “C,” “W”, “W2” and “TWIN” terminals to counterparts on each control.
   d. Twinning is automatically detected when wire is connected to the twin terminal on both controls. If twinning is detected and then lost in the same power cycle, the furnace control will declare and display fault code 20 at the seven-segment display.

① See Figure 28 for twinning wire diagram for 1-stage thermostat.

② See Figure 29 for twinning wire diagram for 1-stage thermostat and times staging.

③ See Figure 30 for twinning wire diagram for a 2-stage thermostat.

CONTROL BOARDS

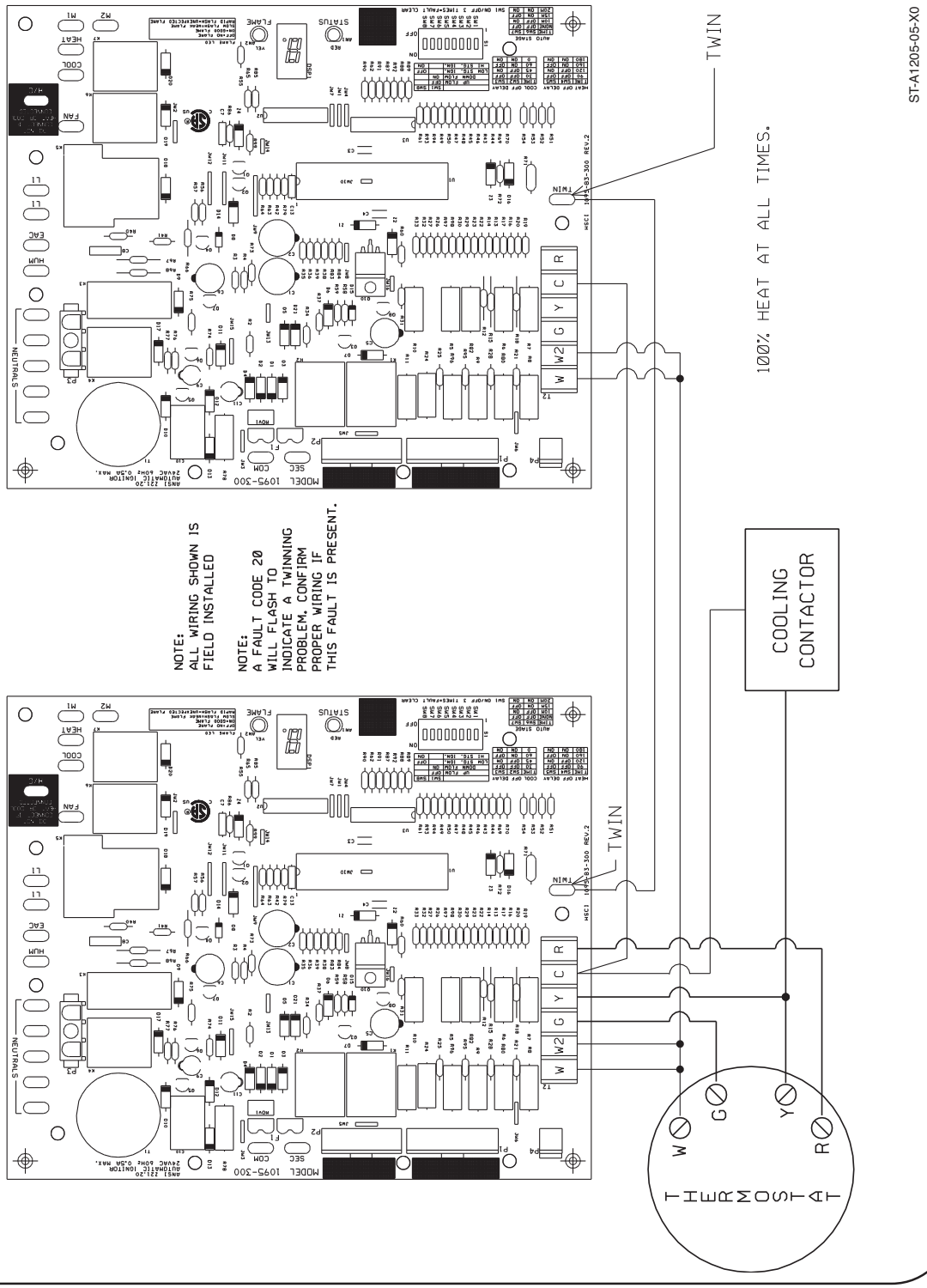

FIGURE 28
UT ELECTRONIC CONTROLS 1095-300 CONTROL BOARD, TWINNING CONNECTION – SINGLE STAGE OPERATION

TWINNING

CONTROL BOARDS (cont.)

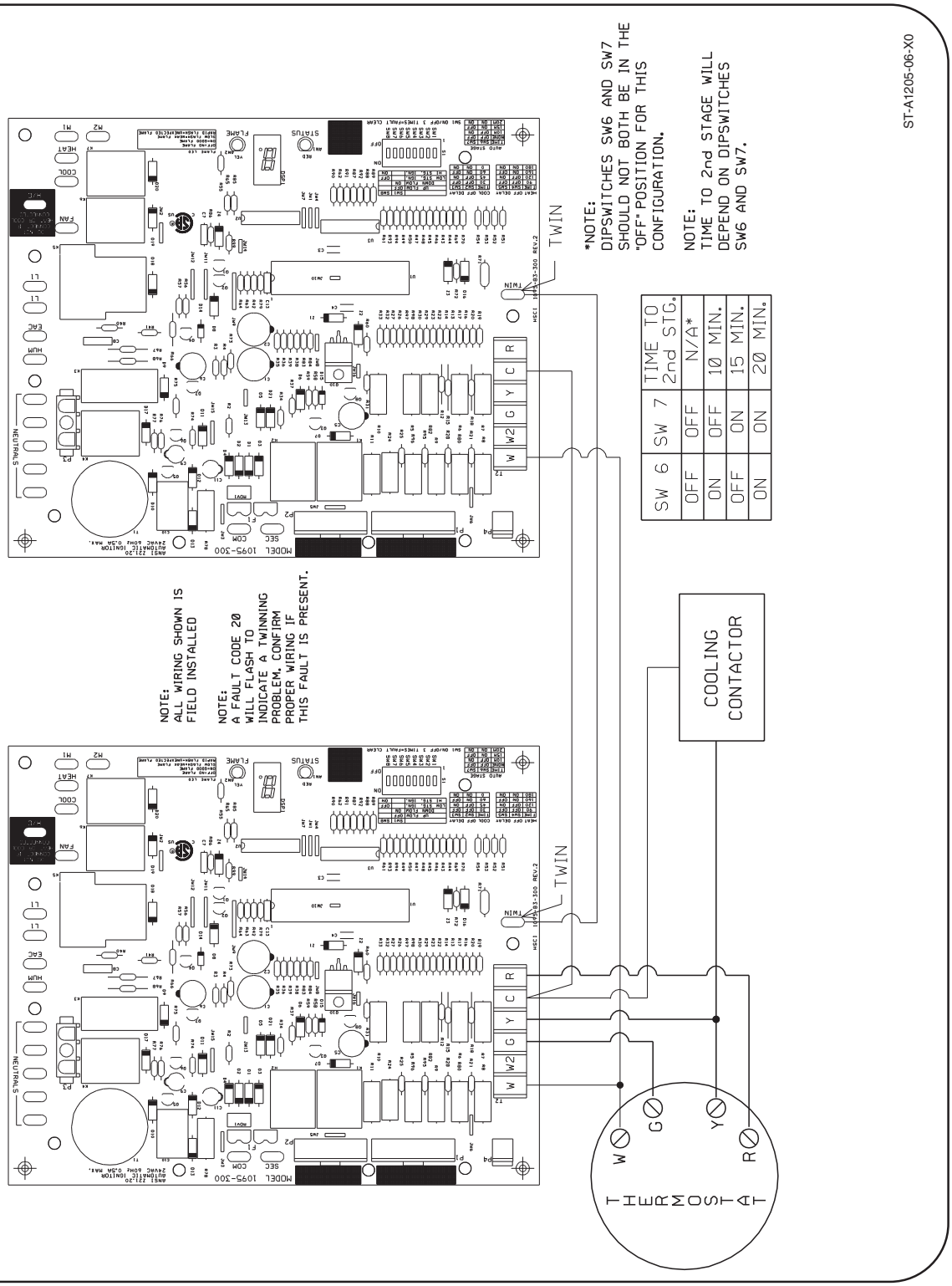

SW 6	SW 7	TIME TO 2nd STG.
OFF	OFF	N/A*
ON	OFF	10 MIN.
OFF	ON	15 MIN.
ON	ON	20 MIN.

FIGURE 29
UT ELECTRONIC CONTROLS 1095-300 CONTROL BOARD, TWINNING CONNECTION – ONE STAGE THERMOSTAT & TIMED STAGING GAS HEAT OPERATION

CONTROL BOARDS (cont.)

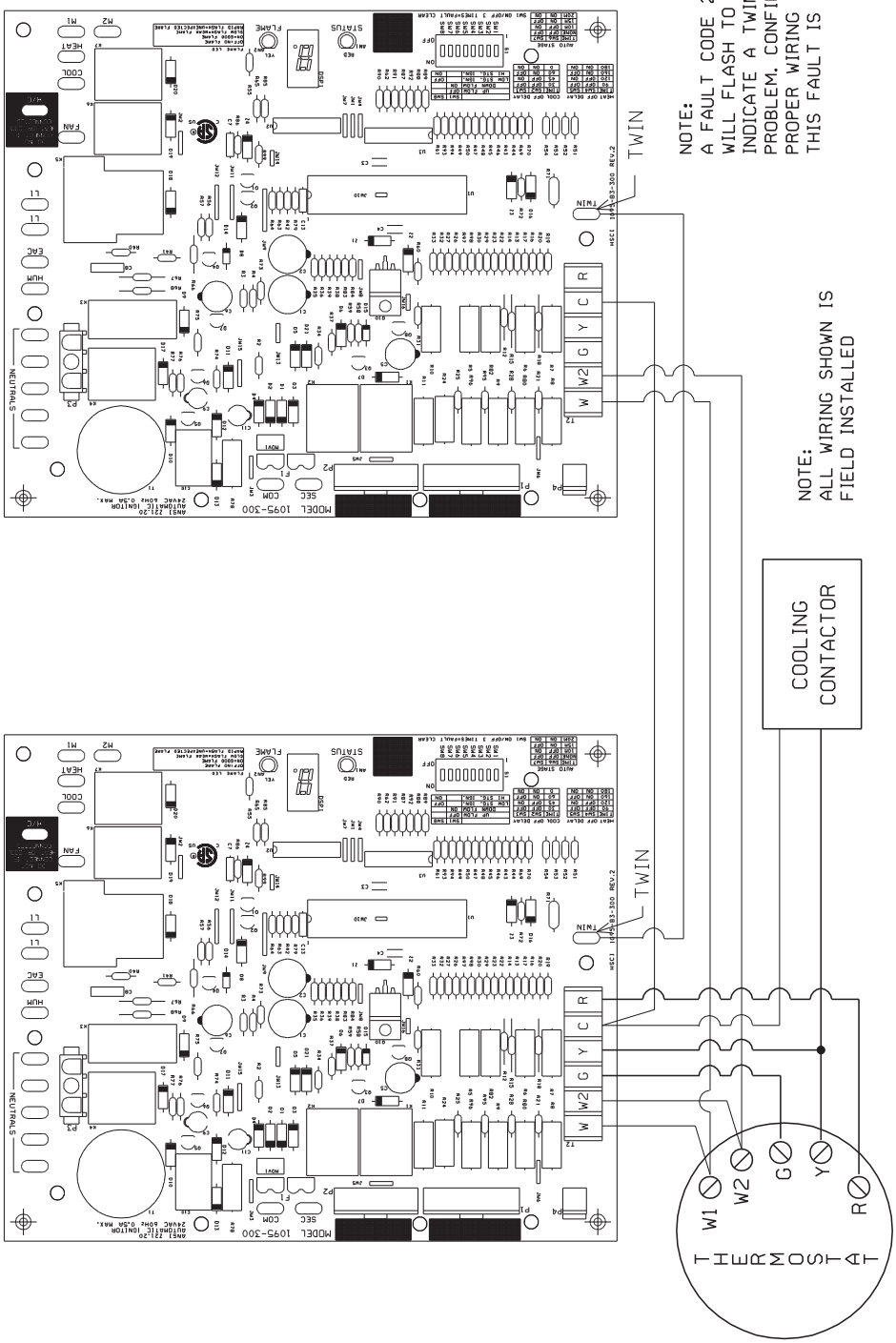

FIGURE 30
UT ELECTRONIC CONTROLS 1095-300 CONTROL BOARD, TWINNING CONNECTION – TWO-STAGE OPERATION

HIGH ALTITUDE

NATURAL GAS AT HIGH ALTITUDES

⚠ WARNING

INSTALLATION OF THIS FURNACE AT ALTITUDES ABOVE 2000 FT (610 m) SHALL BE IN ACCORDANCE WITH LOCAL CODES, OR IN THE ABSENCE OF LOCAL CODES, THE NATIONAL FUEL GAS CODE, ANSI Z223.1/NFPA 54.

⚠ CAUTION

ELEVATIONS ABOVE 2000 FT. REQUIRE THAT THE FURNACE INPUT RATING BE ADJUSTED AND THAT THE SIZE OF THE BURNER ORIFICES BE RE-CALCULATED BASED ON ELEVATION AND GAS HEATING VALUE. THE BURNER ORIFICES MAY (OR MAY NOT) NEED TO BE CHANGED. THE FOLLOWING EXAMPLES SHOW HOW TO DETERMINE IF AN ORIFICE CHANGE WILL BE NECESSARY AND HOW TO DETERMINE THE NEW ORIFICE SIZE.

34" 80 Plus furnaces installed above 2,000 ft. require the furnace to be de-rated 4% per thousand feet.

IMPORTANT: *Factory installed orifices are calculated and sized based on a sea level Natural Gas heating value of 1050 BTU per cubic ft.*

NOTE: Orifices are available through your local distributor.

Reference Table 8 for approximate orifice sizing.

The following are examples of orifice sizing using the National Fuel Gas Code Appendix F:

For a simplified estimation of orifice size based on gas heating value and elevation, Table 8 may be used. However, calculations are the best method.

Example: 900 BTU/ft³ Regional Natural Gas Heating Value

I/H = Q
25000 / 900 = 27.78 ft³

I = Sea Level input (per burner): 25000
H = Sea Level Heating Value: 900
Q = 27.78 ft³ Natural Gas per hour.

From Table F.1 of *National Fuel Gas Code Handbook, 2002* (3.5″ w.c. column).

Orifice required at Sea Level: #40

From Table F.4 of *National Fuel Gas Code Handbook,* Orifice required at 5000 ft. elevation (4% de-rate per thousand ft): #42
Orifice required at 8000 ft. elevation (4% de-rate per thousand ft.): #44

Example: 1050 BTU/ft3 Regional Natural Gas Heating Value

I / H = Q
25000 / 1050 = 23.81ft³

I = Sea Level input (per burner): 25000
H = Sea Level Heating Value: 1050
Q = 23.81 ft³ Natural Gas per hour.

From Table F.1 of *Natural Fuel Gas Code Handbook, 2002* (3.5″ w.c. column).

Orifice required at Sea Level: #43

From Table F.4 of *National Fuel Gas Code Handbook, 2002*

Orifice required at 5000 ft. elevation (4% de-rate per thousand ft.): #45

Orifice required at 8000 ft elevation (4% de-rate per thousand ft): #47

ORIFICE ORDERING INFORMATION

Orifice sizes are selected by adding the 2-digit drill size required in the orifice part number. Drill sizes available are 39 through 64; metric sizes available 1.10mm (-90) and 1.15mm (-91):

Orifice Part Number 62-22175-(drill size)

Example 1:
60 drill size orifice required
Part # 62-22175-60

Example 2:
1.15mm drill size orifice required
Part # 62-22175-91

NATURAL GAS AT HIGH ALTITUDES (cont.)

TABLE 8

NATURAL GAS ORIFICE SELECTION BASED ON HEATING VALUE & ELEVATION*

Notes:

1. All (-)80+ units are factory equiped with orifices sized for 1050 sea level heating value gas.

2. Local utilities adjust the sea level heating value of gasses used at higher elevations to compensate for appliance operation at altitude. Installer must be aware of the local heating value (sea level standard) to use the chart below.

3. This chart is based on the National Fuel Gas Code (NFGC) Annex F based on natural gas with a secific gravity of 0.60

4. The recommended orifices below allow the furnace to operate within 10% of design rate. However, NFGC calculations are the best method.

5. Furnace operation is optimized when operating at design rate. Installer is responsible to verify rate.

6. This table applies to 80+ models only with 25,000BTU/Burner. DO **NOT** USE THIS CHART FOR ANY 90+ FURNACE MODEL.

Grey Cells Indicate Factory Orifice Size		ELEVATION									
		Sea Level to 1,999'	**2,000' to 2,999'**	**3,000' to 3,999'**	**4,000' to 4,999'**	**5,000' to 5,999'**	**6,000' to 6,999'**	**7,000' to 7,999'**	**8,000' to 8,999'**	**9,000' to 9,999'**	**10,000'**
Gas Heating Value (BTU's/ft^3) @ Sea Level**	1,000-1,100	43	44	44	44	45	45	46	47	47	48
		42	42	43	43	43	44	44	45	46	47
	900-999	42	42	43	43	43	44	44	45	46	47
		41	42	42	42	43	43	44	44	45	46
		40	41	42	42	42	43	43	44	44	45
	800-899	39	40	41	41	42	42	43	43	44	44
		38	39	40	41	41	42	42	43	43	44
		37	38	39	39	40	41	42	42	43	43
	700-799	37	38	39	39	40	41	42	42	43	43
		36	37	38	38	39	40	41	41	42	43
		35	36	36	37	37	38	39	40	41	42

*Table is derived from Appendix of the ***National Fuel Gas Code*** . To determine the correct orifice for your installation consult the ***National Fuel Gas Code*** tables F.1 and F.4

**Be sure to use sea level heating value. When requesting the heating value from a local utility, it must be converted to sea level equivalent in order to use this table.

HIGH ALTITUDE

LP GAS AT HIGH ALTITUDES

LP GAS (TABLE 9)

NOTE: Keep any parts removed during LP conversion procedure stored with the product literature for future use.

LP Gas is a manufactured gas that has consistent heating value across most regions.

The NFGC guidelines are used with the following exception:

The recommended LP Gas high altitude orifice selections differ slightly in that the NFGC LP orifice chart, as they are not accurate for these products. The National Fuel Gas Code LP orifices are based on an 11" of water column pressure at the orifice, which differs from products that use 10" of water column at the orifice. This difference requires a deviation from the NFGC orifice size recommendations. The Sea Level input should still be reduced by 4% per thousand ft. and the orifice size must be selected based on the reduced input in Table 9.

TABLE 9
LP GAS
IMPORTANT: 80+ MODELS ONLY! DO NOT USE THIS CHART WITH ANY 90+ MODELS.

Altitude	Input (per burner) 25000	Orifice Size
0 to 2000 ft.	25000	#54
2000*-3000*	24000	#54
3000*-4000*	23000	#54
4000*-5000*	22000	#54
5000*-6000*	21000	#54
6000*-7000*	20000	#54
7000*-8000*	19000	#55
8000*-9000*	18000	#55
9000*-10000*	17000	#55

SEQUENCE OF OPERATIONS

This furnace is equipped with a direct ignition control. Each time the room thermostat calls for heat, the ignitor lights the main burners directly. See the lighting instructions on the furnace.

TO START THE FURNACE

1. Remove the burner compartment control access door.
2. **IMPORTANT:** Be sure that the manual gas control has been in the "OFF" position for at least five minutes. Do not attempt to manually light the main burners.
3. Turn off the furnace electrical power and set the room thermostat to its lowest setting.
4. Turn the gas control to the "ON" position or move the gas control lever to the "On" position.
5. Replace the burner compartment control access door.
6. Turn on the furnace electrical power.
7. Set the room thermostat to a point above room temperature to light the main burners.
8. After the burners are lit, set the room thermostat to a desired temperature.
9. Operate gas heat for a minimum period of 15 minutes and adjust input rate (page 44) and observe condensate system for leaks. Correct leaks and set rate, shutdown furnace and repeat until no leaks in condensate system can be detected.

TO SHUT DOWN THE FURNACE

1. Set the room thermostat to its lowest setting and wait for furnace to shut down.
2. Remove the burner compartment control access door.
3. Shut off the gas to the main burners by turning the gas control to the "OFF" position.

⚠ WARNING

SHOULD OVERHEATING OCCUR OR THE GAS SUPPLY FAIL TO SHUT OFF, CLOSE THE MANUAL GAS VALVE FOR THE APPLIANCE BEFORE SHUTTING OFF THE ELECTRICAL SUPPLY. FAILURE TO DO SO CAN CAUSE AN EXPLOSION OR FIRE RESULTING IN PROPERTY DAMAGE, PERSONAL INJURY OR DEATH.

SEQUENCE OF OPERATION

UT ELECTRONIC CONTROLS

Integrated Controls with Direct Spark Ignition.

1. Each time the thermostat "W" (Heating) contacts close, the furnace control checks to make sure the pressure switch is open. Next the induced draft blower (inducer) begins a pre-purge cycle. Inducer starts on high.
2. After proving high and low pressure switches have closed, inducer slows to low speed.
3. After the 30-second pre-purge, **the gas valve opens on low fire for an 8-second trial for ignition.**
4. The spark igniter is energized to light the gas burners and **stays energized for the up to 7 seconds after the gas valve opens.**
5. 8 seconds after the gas valve opens **the remote flame sensor must prove flame ignition for *one second*** using the process of flame rectification. If the burners don't light, the system goes through another ignition sequence. It does this **up to four** times before entering a 1-hour lockout.
6. The main blower starts approximately 20 seconds after the burners ignite.
7. After blower starts unit will shift to either low or high heat as determined by thermostat.
8. When the thermostat "W" (Heat Call) ends, the gas valve closes, flame is extinguished, the induced draft blower stops after **a 10-second post-purge,** and the negative pressure switches opens.
9. The main blower continues until timed off by the setting on the integrated furnace control board.

Sequence if the system doesn't light or doesn't sense flame:

1. On a call for heat, the furnace control checks to make sure the pressure switch is open. Next the control runs the inducer for 30 seconds to prepurge.
2. After the 30-second pre-purge, the gas valve opens for an 8-second trial for ignition. The inducer continues and the igniter stays energized.
3. If flame is not sensed during the 8th second after the gas valve opens, the gas valve closes, and the igniter de-energizes.
4. The inducer stops (may take up to 20 seconds for inducer fan to stop rotating) and the control verifies that the pressure switch has opened. Once the open pressure switch is confirmed, the control begins the next ignition cycle by energizing the inducer for a pre-purge of 30 seconds. After a 30-second pre-purge period, the gas valve is energized and the control looks for a flame signal for up to 8 seconds. If no flame is sensed, the cycle is repeated up to 4 times before entering a 1-hour lockout.

FAULT CODES

FAULT CODES

DIAGNOSTICS AND FAULT CODES

All furnace controls come standard with a 7-segment diagnostic display. During standby mode with no fault codes present, the display will read “0” (zero). During normal thermostat heating, cooling or continuous fan operation, a letter will be displayed to describe the mode of operation as follows:

C = Cooling or Heat-Pump Heat Operation

F = Continuous Fan Operation

H = Gas Heating Operation

When the control senses a fault present, it will display a code to help in diagnoses. A list of normal operating codes and potential fault codes follows:

CODE	Description	Fault Priority
0	STANDBY	24
C	COMPRESSOR ON (COOLING OR HEAT-PUMP HEAT)	22
H	HIGH GAS HEAT ON	21
h	LOW GAS HEAT ON	19
F	CONTINOUS FAN ON	23
10	1 HOUR LOCKOUT	13
11	FAILED IGNITION	15
12	LOW FLAME SENSE	14
13	FLAME LOST	16
14	UNEXPCTED FLAME	2
20	TWINNING FAULT	20
22	MAIN LIMIT OPEN	4
26	LINE AND NEUTRAL REVERSED	17
33	MRLC (MANUAL RESET LIMIT CONTROL) (AKA ROLL-OUT) OPEN	3
44	LOW PRESSURE SWITCH CLOSED	6
46	LOW PRESSURE SWITCH OPEN, INDUCER ON LOW SPEED	9
45	LOW PRESSURE SWITCH OPEN, INDUCER ON HIGH SPEED	8
55	HIGH PRESSURE SWITCH CLOSED	7
57	HIGH PRESSURE SWITCH OPEN	11
61	BLOWER FAULT – BLOWER UNABLE TO RUN	18

The method for displaying a two-digit fault is to display the first (most significant) digit for one second immediately followed by the second digit – which is also displayed for a duration of one second. A ½ second pause is then displayed. Cycle repeats until the fault is cleared. Each fault is flashed (displayed) a minimum of two times even if the fault condition has cleared before the fault can be displayed twice.

DUAL FAULTS DISPLAYED

In some cases when two faults are present simultaneously, both faults are displayed. These exceptions for dual faults are noted below.

Sequence of display:

A. The first two-digit fault will be displayed once as described above.

B. The upper-most horizontal segment of the seven-segment display is energized for ½ second.

C. The second two-digit fault is displayed once as described above.

D. The upper-most horizontal segment of the seven-segment display is energized for ½ again.

This cycle repeats until one fault is gone (in which case the remaining fault will be displayed as described above) or both faults are gone or otherwise as noted below:

1. When a failed ignition has occurred four times in a row, the control enters one-hour lockout and fault codes ***“10”*** and ***“11”*** will be displayed alternately as described above.
2. When flame is lost five times in a row, the control enters one-hour lockout and fault codes ***“10”*** and ***“13”*** will be displayed alternately as described above (A-D).
3. While the control is in one-hour lockout due to an unexpected flame, the fault codes ***“14”*** (unexpected flame) and ***“10”*** (soft lockout) will be displayed alternately at the seven-segment display as described above (A-D).
4. While the control has entered a one-hour lockout after declaring a dead blower after the main limit control has been open for more than 150 seconds, the fault codes ***“61”*** (Non-operational blower) and ***“10”*** (soft lockout) will be displayed alternately as described above (A-D). Note: the dead blower fault and associated one-hour lockout will occur up to four times in one heat call. Upon declaring this fault for the fourth time in one heat call, the control will enter hard lockout.
5. When the main limit has been open during a gas heat call for more than 150 seconds and has not yet re-closed, the fault codes ***“61”*** (Non-operational blower) and ***“22”*** (open limit) will be displayed alternately as described above (A-D) until the limit re-closes.

The higher priority fault code will be displayed until the condition is corrected then the lower priority fault code will display (provided the fault condition is still present).

LOCKOUT

All lockout conditions can be cleared immediately provided that the original fault causing the lockout is cleared and power to the unit is cycled off and then back on again or (soft lockout only) if a heat call is cycled off for greater than 2 seconds but less than 20 seconds.

The furnace control will not initiate a heat cycle during any lockout condition. A call for compressor or continuous fan will generally be responded to but control will display the lockout error fault code instead of the “C” (for compressor) or “F” (for Continuous fan).

FIVE-MINUTE LOCKOUT

A five minute “soft” lockout will be initiated if the low pressure switch fails to close after 60 seconds of continuous inducer operation at the beginning of a normal heat cycle (pressure switch proving period). The seven-segment display will display the appropriate fault. Lockout will automatically be reset after five minutes.

ONE-HOUR LOCKOUT

A one hour “soft” lock out will be initiated when:

- Flame has not been detected after four ignition trials.
- Flame has been lost for five times in one heat call.
- Undesired flame has been detected. The one-hour period will commence after flame is no longer detected.
- Dead Blower has been detected (main limit circuit open for more than 150 seconds)
- When voltage has unexpectedly been detected on the gas valve circuit and voltage goes away when inducer is shut off.

The seven-segment display will alternately display “*10*” and the code number for the fault causing the lockout. Lockout will automatically be reset after one hour

HARD LOCKOUT

Three conditions shall cause a hard lockout:

1. The control senses an unspecified internal fault. Fault code ***“93”*** is set and displayed. This lockout condition cannot be reset by cycling the heat call.
2. Voltage is detected unexpectedly on the gas valve contacts (welded relay) and will not clear by cycling the inducer. Fault code ***“93”*** is set and displayed. This lockout condition cannot be reset by cycling the heat call.
3. The furnace control will declare that the blower motor is inoperable (dead) if the main limit control has been open for more than 150 seconds. Gas heating is terminated. However, the control continues to try to operate heating for up to four attempts in case the blower motor starts working again. If a dead blower has been declared four times in one heat call, the furnace control enters a hard-lockout. Fault code ***“61”*** is set and displayed. This lockout condition **CAN** be reset by cycling the heat call.

FIELD SELECTIONS — DIPSWITCHES

A dipswitch bank; SW1 is provided for some field adjustments. Heating blower off delay, cooling (and heat-pump) blower off delay, display (7-Segment) orientation and fault clear are the adjustments and functions that can be handled using the dipswitches.

Seven-Segment Display Orientation; SW1

As the control will be applied in a multi-position furnace a means of changing the orientation of the seven segment display is required. This dipswitch is to be labeled SW1. Factory setting of the SW1 dipswitch is OFF. The factory setting display orientation is with the control placed in a vertical orientation and the low voltage terminal block T2 is on the left.

Cool Blower-Off Delay; SW2 & SW3

A means of selecting the cooling speed blower "off" delay time is provided. In legacy mode, dipswitches are required to select the delay time. These dipswitches are to be labeled SW2 and SW3. The following table defines the settings:

Selection*	SW2	SW3	Selection
A	OFF	OFF	30 seconds
	Note: Factory setting = 30 seconds		
B	ON	OFF	45 seconds
C	OFF	ON	60 seconds
D	ON	ON	0 seconds

*(ref only)

Heat Blower Off Delay; SW4, SW5

Two dipswitches (SW4, SW5) can be used to select heat blower off delays (in seconds) in legacy mode.

Selection*	SW4	SW5	Heat OFF Delay (high & low)
A	OFF	OFF	90 (Factory Setting)
B	ON	OFF	120
C	OFF	ON	160
D	ON	ON	180

*(ref only)

FIGURE 31
DIPSWITCH MAP

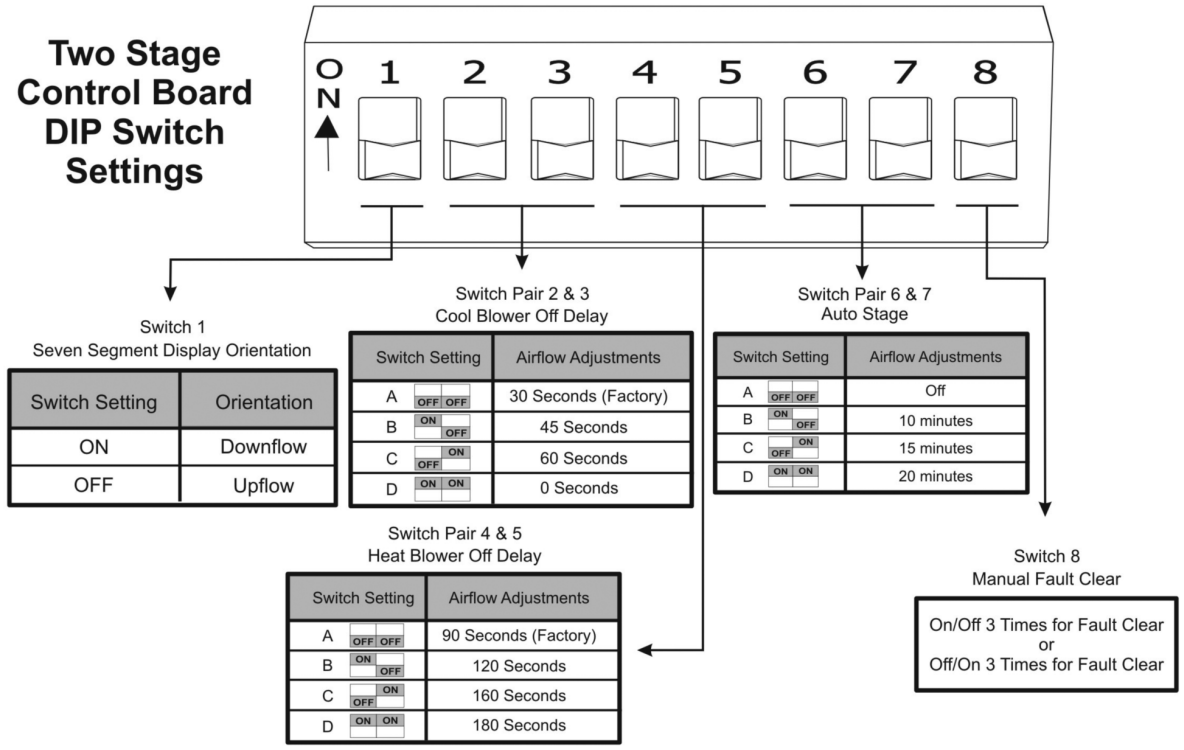

Switch Setting	Orientation
ON	Downflow
OFF	Upflow

Switch Setting	Airflow Adjustments
A OFF OFF	30 Seconds (Factory)
B ON OFF	45 Seconds
C OFF ON	60 Seconds
D ON ON	0 Seconds

Switch Setting	Airflow Adjustments
A OFF OFF	Off
B ON OFF	10 minutes
C OFF ON	15 minutes
D ON ON	20 minutes

Switch Setting	Airflow Adjustments
A OFF OFF	90 Seconds (Factory)
B ON OFF	120 Seconds
C OFF ON	160 Seconds
D ON ON	180 Seconds

TIMING DIAGRAM, FIELD SELECTIONS & ADJUSTMENTS

FIELD SELECTIONS — DIPSWITCHES (continued)

Auto Stage; SW6 & SW7

There are applications where a single stage thermostat is used with the two stage furnace. With this application the furnace will initially operate in the low heat stage. Based upon a user selected time, the furnace will automatically stage to high heat stage mode. auto staging will take place with a 24VAC signal on “W1” when autostaging is turned on. “W2” will be recognized as a call for stage 2 heat even when autostaging is active. The following dipswitches are available to accommodate this requirement:

Selection*	SW6	SW7	AutoStage
A	OFF	OFF	Normal 2 stage operation (Autostaging is off) (factory setting)
B	ON	OFF	AutoStage, 10 minutes on low, then to high with call on “W1”
C	OFF	ON	AutoStage, 15 minutes on low, then to high with call on “W1”
D	ON	ON	AutoStage, 20 minutes on low, then to high with call on W1” *(ref only)

Manual Fault Clear; SW8

For the first 30 seconds after a change in state of dipswitch SW8, the furnace control will wait to determine if the switch becomes *on/off/on/off/on/off* or *off/on/off/on/off/on* within 30 seconds. When this action is detected within 30 seconds, the fault code memory buffer shall be cleared.

Field Selections

FAULT CLEAR

MANUAL FAULT CLEAR; SW8

Faults will automatically be cleared from the fault buffer after one week. The fault buffer can also be manually cleared if this is desired. For the first 30 seconds after a change in state of dipswitch SW8, the furnace control will wait to determine if the switch becomes ***on/off/on/off/on/off*** or ***off/on/off/on/off/on*** within 30 seconds. When this action is detected within 30 seconds, the fault code memory buffer shall be cleared. Be sure to return the dipswitch to the original state (on or off) or is in the desired position after clearing the fault buffer using this method.

FAULT RECALL

Upon power reset, the three most recent faults which are less than one week old will be flashed in succession from the most recent to the oldest. This will be done as a diagnostic aid to the field technician. After one week, a fault will be removed from the fault buffer.

FLAME STATUS L.E.D. (AMBER)

A yellow or amber L.E.D. is provided to indicate flame status. When normal flame is sensed, the flame L.E.D. is continuously on. The flame L.E.D. will flash at a rate of one to four flashes per second if a weak flame is detected. If an unexpected flame is detected, the L.E.D. will flash rapidly. The L.E.D. is off when there is no flame detected.

For more diagnostics information, consult the wiring diagram and troubleshooting chart at the end of this book.

TIMING DIAGRAM

On the next page is a timing diagram for normal heat sequence. This diagram assumes no faults are present during the heat call.

TIMING DIAGRAM, FIELD SELECTIONS & ADJUSTMENTS

TABLE 10
TIMING DIAGRAM

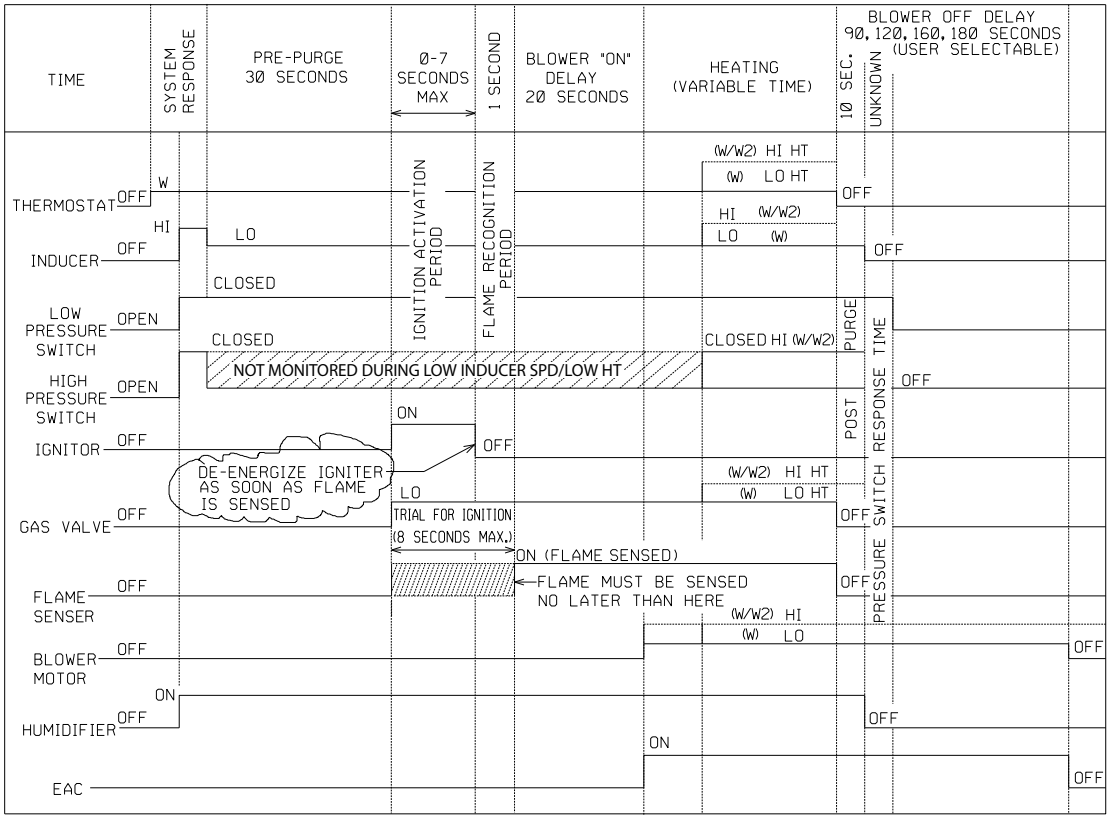

ADJUSTING OR CHECKING FURNACE INPUT

The maximum gas supply pressure to the furnace should be 10.5" w.c. for natural gas and 13.0" w.c. for L.P. The minimum gas supply pressure for purposes of input adjustment to the furnace should be 5" w.c for natural gas and 11.0" w.c. for L.P.

A calibrated manometer is required for accurate gas pressure readings.

The manifold pressure should be set at 3.5" w.c. high fire, 1.8" low fire, for natural gas and 10.0" w.c. high fire and 4.9" w.c. low fire for L.P. Only small variations in the gas flow should be made by means of the pressure regulator adjustment. In no case should the final manifold pressure vary more than plus or minus 0.3" w.c. from the above-specified pressures. To adjust the pressure regulator, remove the regulator cap and turn the adjustment screw clockwise to increase pressure or counterclockwise to decrease pressure. Then replace the regulator cap securely. Any necessary major changes in the gas flow rate should be made by changing the size of the burner orifices.

To change orifice spuds, shut off the manual gas valve and remove the gas manifold. On LP gas furnaces, the LP gas supply pressure must be set between 11" and 13" w.c. by means of the tank or branch supply regulators. The furnace manifold pressure should be set at 10" w.c. at the gas control valve. For elevations up to 2,000 feet, rating plate input ratings apply. For high altitudes (elevations over 2,000 ft.), see conversion kit index for derating and orifice spud sizes.

Checking furnace input is important to prevent over firing beyond its design-rated input. NEVER SET INPUT ABOVE THAT SHOWN ON THE RATING PLATE. Use the following table or formula to determine input rate. Start the furnace and measure the time required to burn one cubic foot of gas. Prior to checking the furnace input, make certain that all other gas appliances are shut off, with the exception of pilot burners. Time the meter with only the furnace in operation.

TABLE 11
METER TIME

METER TIME IN MINUTES AND SECONDS FOR NORMAL INPUT RATING OF FURNACES EQUIPPED FOR NATURAL GAS OR L.P.											
INPUT (BTU/HR)	METER SIZE (FT^3/REV)	HEATING VALUE OF GAS (BTU/FT^3)									
		900		1000		1040		1100		2500	
		MIN	SEC	MIN	SEC	MIN	SEC	MIN	SEC	MIN	SEC
50,000	ONE	1	5	1	12	1	15	1	19	3	0
	TEN	10	48	12	0	12	29	13	12	30	0
75,000	ONE	0	43	0	48	0	50	0	53	2	0
	TEN	7	12	8	0	8	19	8	48	20	0
100,000	ONE	0	32	0	36	0	37	0	40	1	30
	TEN	5	24	6	0	6	14	6	36	15	0
125,000	ONE	0	26	0	29	0	30	0	32	1	12
	TEN	4	19	4	48	4	60	5	17	12	0
150,000	ONE	0	22	0	24	0	25	0	26	1	0
	TEN	3	36	4	0	4	10	4	24	10	0

Formula: $\text{Input BTU/HR} = \frac{\text{Heating Valure of Gas (BTU/FT}^3\text{) x 3600 x correction factor}}{\text{Time (in seconds) for 1 cubic FT of Gas}}$

SETTING INPUT RATE

The furnace is shipped from the factory with #42 orifices. They are sized for natural gas having a heating value of 1050 BTU/cu. ft. and a specific gravity of .60.

Since heating values vary geo-graphically, the manifold pressure and/or gas orifice size may need to be changed to adjust the furnace to its nameplate input. Consult the local gas utility to obtain the yearly average heating value and orifice size required to fire each individual burner at 25,000 BTU/HR.

NOTE: Refer to the High Altitude Section of this manual and the National Fuel Gas Code for high altitude rate adjustment above 2,000 ft.

AIRFLOW

The importance of proper air flow over the heat exchanger cannot be over emphasized.

⚠ CAUTION

IT IS IMPORTANT THAT EACH DUCT SYSTEM BE SIZED AND INSTALLED FOR THE SPECIFIC APPLICATION BY PROPERLY APPLYING THE APPROPRIATE INDUSTRY ACCEPTED STANDARD. IF LESS THAN MINIMUM STANDARDS ARE APPLIED, THE EQUIPMENT USER COULD EXPECT TO EXPERIENCE HIGHER UTILITY BILLS, MAJOR COMPONENT FAILURE, VARYING DEGREES OF AIR NOISE OR OTHER UNSATISFACTORY ISSUES, OVER WHICH THE MANUFACTURER HAS NO CONTROL.

One of the most common causes of heat exchanger failure is overheating due to low air flow. An air flow table is located inside the blower door and on the following pages.

TEMPERATURE RISE CHECK

To determine if the air flow is correct, make a temperature rise check.

1. Insert a thermometer in the supply air duct as close to the furnace as possible yet out of a direct line from the heat exchanger. See Figure 32.
2. Insert a thermometer in the return air duct as close to the furnace as possible.
3. Operate the furnace.
4. When the thermometer in the supply air duct stops rising (approximately five minutes), subtract the return air temperature from the supply air temperature. The difference is the temperature rise.
5. Compare the measured temperature rise to the approved temperature rise range listed on the furnace name plate. See Figure 33.

If the measured temperature rise is above the approved range, either the air flow is too low or the manifold pressure needs to be adjusted. More air must be moved by speeding up the blower, by removing restrictions in the duct system, or by adding more supply or return air duct. If the measured temperature rise is below the approved range, either the air flow is too much or the manifold pressure needs to be adjusted. Use lower speed tap on the multi-speed blower.

IMPORTANT: *The measured temperature rise should be in the middle of the range.*

IMPORTANT: *Some high-efficiency filters have a greater than normal resistance to airflow. This can adversely affect furnace operation. BE SURE TO CHECK AIRFLOW if using any filter other than factory-provided filter.*

⚠ WARNING

THE MEASURED TEMPERATURE RISE SHOULD BE AS CLOSE TO THE MIDDLE OF THE STATED RANGE AS POSSIBLE. FOR EXAMPLE, IF THE RISE RANGE IS 40 TO 70°F (4.5°-21°C), THE MIDDLE OF THE RISE RANGE IS 55°F (12.8°C). IN ALL APPLICATIONS, THE INSTALLER MUST ADJUST THE TEMPERATURE RISE TO THIS "MIDDLE" POINT AS CLOSELY AS POSSIBLE. ALSO, THE TEMPERATURE RISE SHOULD NEVER BE ABOVE OR FALL BELOW THE STATED RANGE. DOING SO COULD CAUSE DAMAGE TO THE HEAT EXCHANGER OR INTERMITTENT OPERATION. THIS COULD CAUSE INJURY OR DEATH AND WILL VOID THE MANUFACTURER'S WARRANTY FOR THIS PRODUCT.

FIGURE 32
TEMPERATURE RISE MEASUREMENT

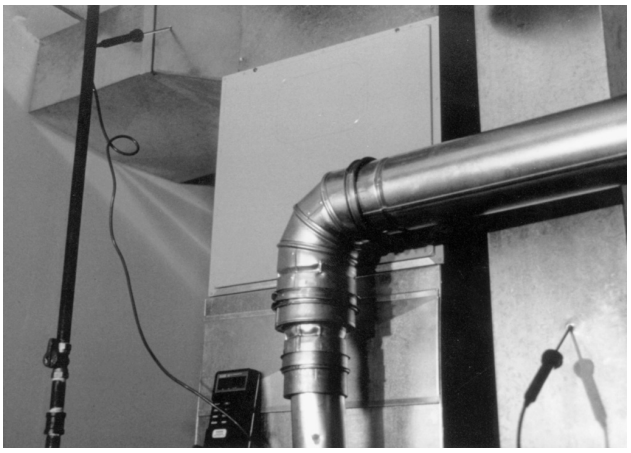

FIGURE 33
TYPICAL FURNACE NAME PLATE

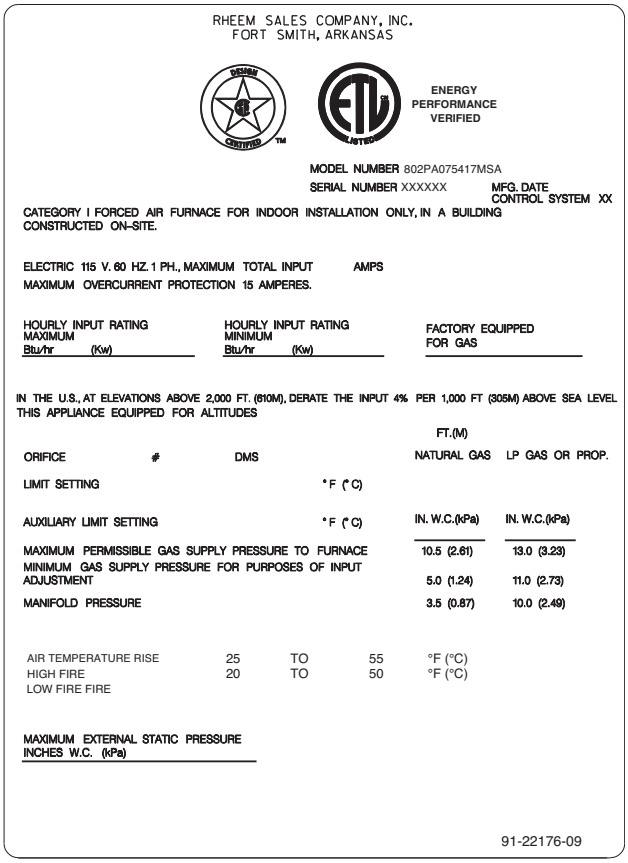

RHEEM SALES COMPANY, INC.
FORT SMITH, ARKANSAS

ENERGY PERFORMANCE VERIFIED

MODEL NUMBER 802PA075417MSA
SERIAL NUMBER XXXXXX MFG. DATE CONTROL SYSTEM XX

CATEGORY I FORCED AIR FURNACE FOR INDOOR INSTALLATION ONLY, IN A BUILDING CONSTRUCTED ON–SITE.

ELECTRIC 115 V. 60 HZ. 1 PH., MAXIMUM TOTAL INPUT AMPS
MAXIMUM OVERCURRENT PROTECTION 15 AMPERES.

HOURLY INPUT RATING MAXIMUM Btu/hr (Kw)
HOURLY INPUT RATING MINIMUM Btu/hr (Kw)
FACTORY EQUIPPED FOR GAS

IN THE U.S., AT ELEVATIONS ABOVE 2,000 FT. (610M), DERATE THE INPUT 4% PER 1,000 FT (305M) ABOVE SEA LEVEL THIS APPLIANCE EQUIPPED FOR ALTITUDES FT.(M)

ORIFICE # DMS	NATURAL GAS	LP GAS OR PROP.
LIMIT SETTING °F (°C)		
AUXILIARY LIMIT SETTING °F (°C)	IN. W.C.(kPa)	IN. W.C.(kPa)
MAXIMUM PERMISSIBLE GAS SUPPLY PRESSURE TO FURNACE	10.5 (2.61)	13.0 (3.23)
MINIMUM GAS SUPPLY PRESSURE FOR PURPOSES OF INPUT ADJUSTMENT	5.0 (1.24)	11.0 (2.73)
MANIFOLD PRESSURE	3.5 (0.87)	10.0 (2.49)

AIR TEMPERATURE RISE	25	TO	55	°F (°C)
HIGH FIRE	20	TO	50	°F (°C)
LOW FIRE FIRE				

MAXIMUM EXTERNAL STATIC PRESSURE INCHES W.C. (kPa)

91-22176-09

TABLE 12

AIR FLOW PERFORMANCE – (-)802P/(-)(-)80MDP SERIES MODELS

Model	Motor HP Blower Size, IN.	CFM Air Delivery External Static Pressure, " W.C.								
		Speed Tap	0.1	0.2	0.3	0.4	0.5	0.6	0.7	0.8
(-)802PA050314MSA (-)(-)80MDP050A30SA	1/3 11 x 6	Low**	823	803	787	732	718	691	651	593
		Med. Lo*	1030	1018	1006	976	929	897	850	808
		Med. Hi	1129	1132	1112	1087	1054	1028	971	919
		High	1361	1353	1331	1297	1264	1232	1164	1117
(-)802PA075417MSA (-)(-)80MDP075B30SA	1/2 11 x 7	Low**	1229	1200	1181	1155	1120	1078	1013	970
		Med. Lo	1308	1267	1266	1233	1204	1176	1113	1062
		Med. Hi*	1553	1542	1516	1491	1451	1417	1358	1306
		High	1969	1924	1893	1840	1803	1728	1657	1570
(-)802PA100521MSA (-)(-)80MDP100C40SA	1/2 11 x 10	Low**	1209	1182	1131	1112	1051	976	929	867
		Med. Lo*	1438	1420	1386	1350	1320	1293	1248	1186
		Med. Hi	1902	1883	1844	1817	1753	1700	1636	1547
		High	2071	2037	2001	1962	1905	1856	1807	1709
(-)802PA125524MSA (-)(-)80MDP125D50SA	3/4 11 x 10	Low**	1358	1354	1331	13091	1250	1224	1154	1089
		Med. Lo	1541	1517	1476	1453	1416	1371	1339	1277
		Med. Hi*	1799	1774	1746	1712	1691	1629	1554	1495
		High	2015	1989	1929	1902	1862	1815	1742	1665
(-)802PA150524MSA (-)(-)80MDP150D50SA	3/4 11 x 10	Low**	1411	1395	1370	1334	1310	1252	1220	1150
		Med. Lo	1606	1579	1569	1537	1499	1468	1407	1346
		Med. Hi*	1889	1891	1849	1828	1764	1717	1659	1609
		High	2178	2160	2105	2067	2024	1976	1916	1832

**Low Heating
*High Heating

BLOWER SPEED SELECTIONS

The furnace controls have four active quick connect terminals for connecting the motor speed leads. These are:

1. LO HEAT/FAN — motor runs on this speed when the thermostat is in the "FAN ON" position or when low stage heat (W) is energized.
2. COOL — connect desired cooling speed.
3. HI HEAT — connect desired high heating speed.
4. H/C (for heat/cool) — connect desired speed when high heating and cooling speed are the same.

In addition to the active motor terminals, there are two motor parking terminals (labeled M1 and M2) available for placing any unused motor taps. All unused motor taps should be connected to either M1 or M2. These terminals (M1 and M2) will not be energized under any condition.

IMPORTANT: Do not connect any motor speeds to "HI HEAT" and/or "COOL" if you use the "HEAT/COOL" terminal.

If cooling speed and fan speed are desired to be the same, this may be accomplished by not connecting "Y" to the integrated furnace control.

See selection titled "Field Selections – Dipswitches" for setting the heating and cooling blower off delay times.

SAFETY FEATURES

LIMIT CONTROL

The high limit cut-off temperature is set at the factory and cannot be adjusted. The temperature setting prevents the air temperature leaving the furnace from exceeding the maximum outlet air temperature, which, if exceeded, will shut the furnace down.

There are several reasons for a limit switch to open and almost always involve low airflow through the furnace.

1. A dirty or restricted air filter.
2. A dirty or restricted cooling coil.
3. Undersized or restricted return air system.
4. Undersized or restricted supply air system.
5. A problem affecting the main blower:
   A. A wrong speed tap selection.
   B. Failing motor bearings.
   C. Low voltage to the motor.
   D. Dirty blower wheel.
   E. Wrong motor rotation.
   F. Blower wheel slipping on the motor shaft.
   G. Bad run capacitor.
6. Overfiring the furnace with too much gas pressure.
7. Ventilation problems.

FLAME ROLL-OUT SAFETY SWITCHES

Furnaces are equipped with safety switches to protect against flame roll-out conditions in the burner compartment, which, if tripped, will terminate the heating cycle. In the event of a flame roll-out condition, the switch will shut the furnace down. Switches for the furnaces are located on either side of the burner cover plate and just above the burners on the blower divider panel. If a switch is tripped, it must be manually reset. DO NOT jumper or reset this switch. If this switch should trip, a qualified installer, service agency or the gas supplier should be called to diagnose and/or correct the source of tripping. If this unit is mounted in a closet, the door must be closed when making this check.

PRESSURE SWITCH

This furnace is equipped with a normally-open pressure switches that monitors pressure conditions within the furnace vent system during the heating cycle.

There are several reasons for the pressure switch not to close.

1. An inoperative induced draft blower.
2. A loose or leaky pressure switch hose.
3. A blockage in the vent.
4. Severe downdrafts canceling the draft from the inducer fan.
5. A leaky gasket at the induced draft blower.
6. Improperly sized or installed vent.

The pressure switch contacts must open before the unit can go through another heating cycle.

See diagnostic chart in this book for diagnostic recommendations.

⚠ WARNING

DO NOT BYPASS, JUMPER, OR REMOVE ANY SAFETY SWITCH FROM THE FURNACE CONTROL CIRCUIT. IF A SAFETY SWITCH CAUSES THE FURNACE TO SHUT DOWN OR OPERATE INTERMITTENTLY, IT IS AN INDICATION OF A POTENTIAL SAFETY HAZARD THAT MUST BE ADDRESSED BY A QUALIFIED TECHNICIAN, SERVICE AGENCY OR THE GAS SUPPLIER. DO NOT RESET SAFETY CONTROLS WITHOUT CORRECTIVE ACTION AND/OR VERIFICATION OF PROPER SAFE OPERATION BY A QUALIFIED INSTALLER, SERVICE AGENCY OR THE GAS SUPPLIER.

REPLACE ANY SAFETY CONTROL COMPONENT ONLY WITH IDENTICAL OEM REPLACEMENT PARTS. WHEN A NEW SAFETY SWITCH IS INSTALLED, IT MUST BE TESTED FOR A MINIMUM OF 15 MINUTES WITH THE FURNACE OPERATING AT MAXIMUM INPUT RATE AND WITH BOTH BLOWER AND BURNER DOOR INSTALLED. IF THE FURNACE IS INSTALLED IN A CLOSET, THE CLOSET DOOR MUST ALSO BE CLOSED FOR THIS TEST. REPEAT THE TEST AT THE MINIMUM INPUT RATE IF THE FURNACE IS A MULTI-STAGE FURNACE.

MAINTENANCE

⚠ WARNING

THESE INSTRUCTIONS ARE INTENDED AS AN AID TO QUALIFIED SERVICE PERSONNEL FOR PROPER INSTALLATION, ADJUSTMENT AND OPERATION OF THIS UNIT. READ THESE INSTRUCTIONS THOROUGHLY BEFORE ATTEMPTING INSTALLATION OR OPERATION. FAILURE TO FOLLOW THESE INSTRUCTIONS MAY RESULT IN IMPROPER INSTALLATION, ADJUSTMENT, SERVICE OR MAINTENANCE, POSSIBLY RESULTING IN FIRE, ELECTRICAL SHOCK, CARBON MONOXIDE POISONING, EXPLOSION, PROPERTY DAMAGE, PERSONAL INJURY OR DEATH.

DISCONNECT MAIN ELECTRICAL POWER TO THE UNIT BEFORE ATTEMPTING ANY MAINTENANCE. FAILURE TO DO SO CAN CAUSE ELECTRICAL SHOCK RESULTING IN PERSONAL INJURY OR DEATH.

FILTERS

⚠ CAUTION

DO NOT OPERATE THE SYSTEM FOR EXTENDED PERIODS WITHOUT FILTERS. A PORTION OF THE DUST ENTRAINED IN THE AIR MAY TEMPORARILY LODGE IN THE AIR DUCT RUNS AND AT THE SUPPLY REGISTERS. ANY RECIRCULATED DUST PARTICLES WILL BE HEATED AND CHARRED BY CONTACT WITH THE FURNACE HEAT EXCHANGER. THIS RESIDUE WILL SOIL CEILINGS, WALLS, DRAPES, CARPETS AND OTHER HOUSEHOLD ARTICLES.

LUBRICATION

IMPORTANT: DO NOT attempt to lubricate the bearings on the blower motor or the induced draft blower motor. Addition of lubricants can reduce the motor life and void the warranty.

The blower motor and induced draft blower motor are permanently lubricated by the manufacturer and do not require further attention.

It is recommended that the blower motor and induced draft blower motor be cleaned periodically by a qualified installer, service agency, or the gas supplier to prevent the possibility of overheating due to an accumulation of dust and dirt on the windings or on the motor exterior. And, as suggested elsewhere in these instructions, the air filters should be kept clean. Dirty filters can restrict airflow. The motor depends upon sufficient air flowing across and through it to keep from overheating.

MAINTENANCE

SYSTEM OPERATION INFORMATION

ADVISE THE CUSTOMER

1. Keep the air filters clean. The heating system will operate better, more efficiently and more economically.
2. Arrange the furniture and drapes so that the supply air registers and the return air grilles are unobstructed.
3. Close doors and windows. This will reduce the heating load on the system.
4. Avoid excessive use of kitchen exhaust fans.
5. Do not permit the heat generated by television, lamps or radios to influence the thermostat operation.
6. Except for the mounting platform, keep all combustible articles 3 feet from the furnace and vent system.
7. **IMPORTANT:** Replace all blower doors and compartment covers after servicing the furnace. Do not operate the unit without all panels and doors securely in place.
8. Explain the advantages of continuous fan operation to the customer.

ANNUAL INSPECTION

- The furnace should operate for many years without excessive scale build-up in the flue passageways. However, it is recommended that a qualified installer, service agency, or the gas supplier annually inspect the flue passageways, the vent system and the main burners for continued safe operation. Pay particular attention to deterioration from corrosion or other sources.
- **IMPORTANT:** It is recommended that at the beginning and at approximately half way through the heating season, a visual inspection be made of the main burner flames for the desired flame appearance by a qualified installer, service agency or the gas supplier. If the flames are distorted and/or there is evidence of back pressure, check the combustion and ventilation air system for blockage. If there is carbon and scale in the heat exchanger tubes, the heat exchanger assembly should be replaced.

⚠ WARNING

HOLES IN THE VENT PIPE OR HEAT EXCHANGER CAN CAUSE TOXIC FUMES TO ENTER THE HOME, RESULTING IN CARBON MONOXIDE POISONING OR DEATH. THE VENT PIPE OR HEAT EXCHANGER MUST BE REPLACED IF THEY LEAK.

- **IMPORTANT:** It is recommended that at the beginning of the heating season, the flame sensor be cleaned with fine steel wool or Scotch Bright Pad by a qualified installer, service agency or the gas supplier.
- **IMPORTANT:** It is recommended that an annual inspection and cleaning of all furnace markings be made to assure legibility. Attach a replacement marking, which can be obtained through the distributor, if any are found to be illegible or missing.

REPLACEMENT PARTS

Please visit www.myrheem.com/myruud.com for replacement parts information.

DIAGNOSTICS

Refer to Figure 34 for determining cause of unit problems.

WIRING DIAGRAM

Figure 35 is a complete wiring diagram for the furnace.

A wiring diagram is also available on the unit.

FIGURE 34
DIAGNOSTICS FLOWCHART

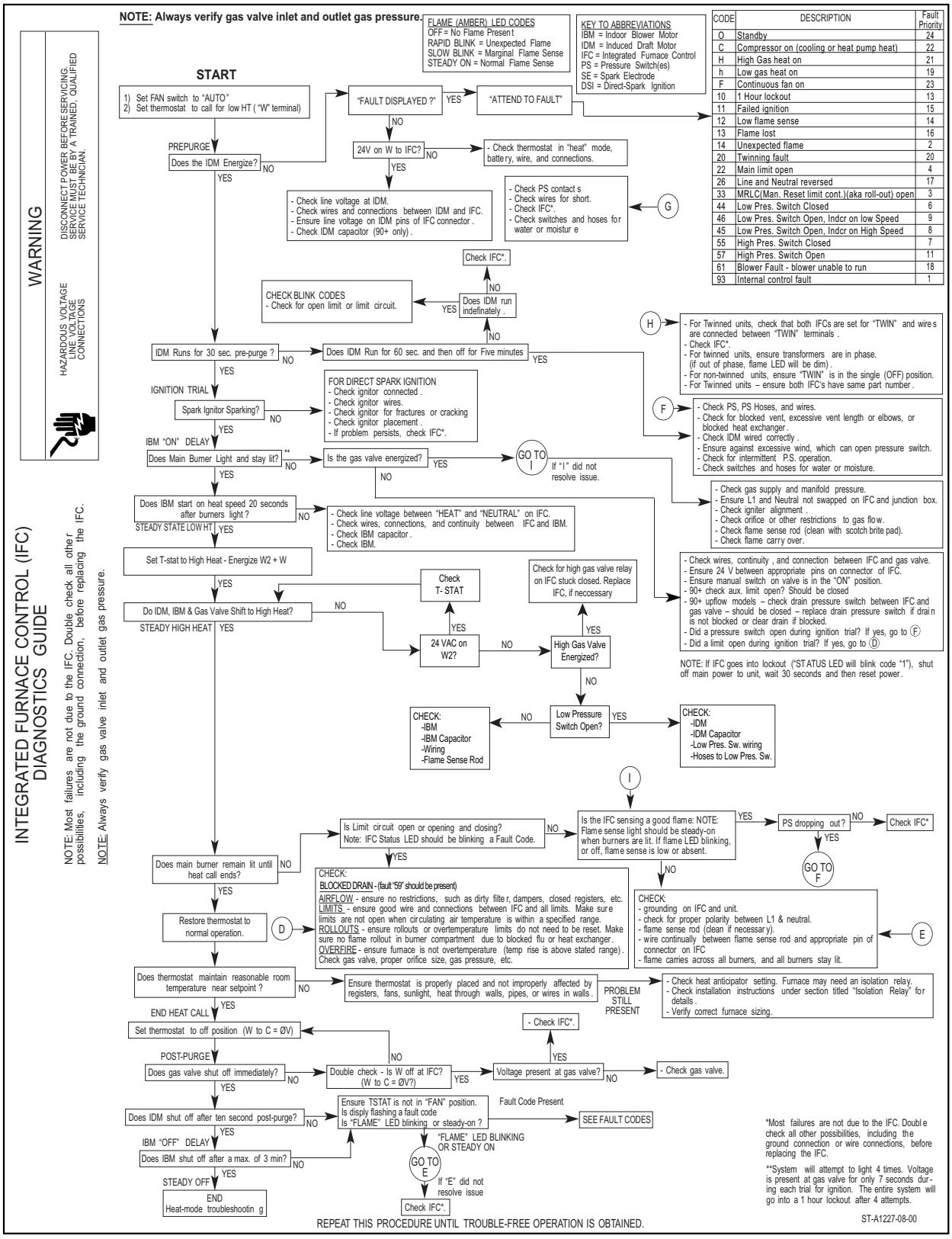

CODE	DESCRIPTION	Fault Priority
O	Standby	24
C	Compressor on (cooling or heat pump heat)	22
H	High Gas heat on	21
h	Low gas heat on	19
F	Continuous fan on	23
10	1 Hour lockout	13
11	Failed ignition	15
12	Low flame sense	14
13	Flame lost	16
14	Unexpected flame	2
20	Twinning fault	20
22	Main limit open	4
26	Line and Neutral reversed	17
33	MRLC(Man. Reset limit cont.)(aka roll-out) open	3
44	Low Pres. Switch Closed	6
46	Low Pres. Switch Open, Indcr on low Speed	9
45	Low Pres. Switch Open, Indcr on High Speed	8
55	High Pres. Switch Closed	7
57	High Pres. Switch Open	11
61	Blower Fault - blower unable to run	18
93	Internal control fault	1

FIGURE 35
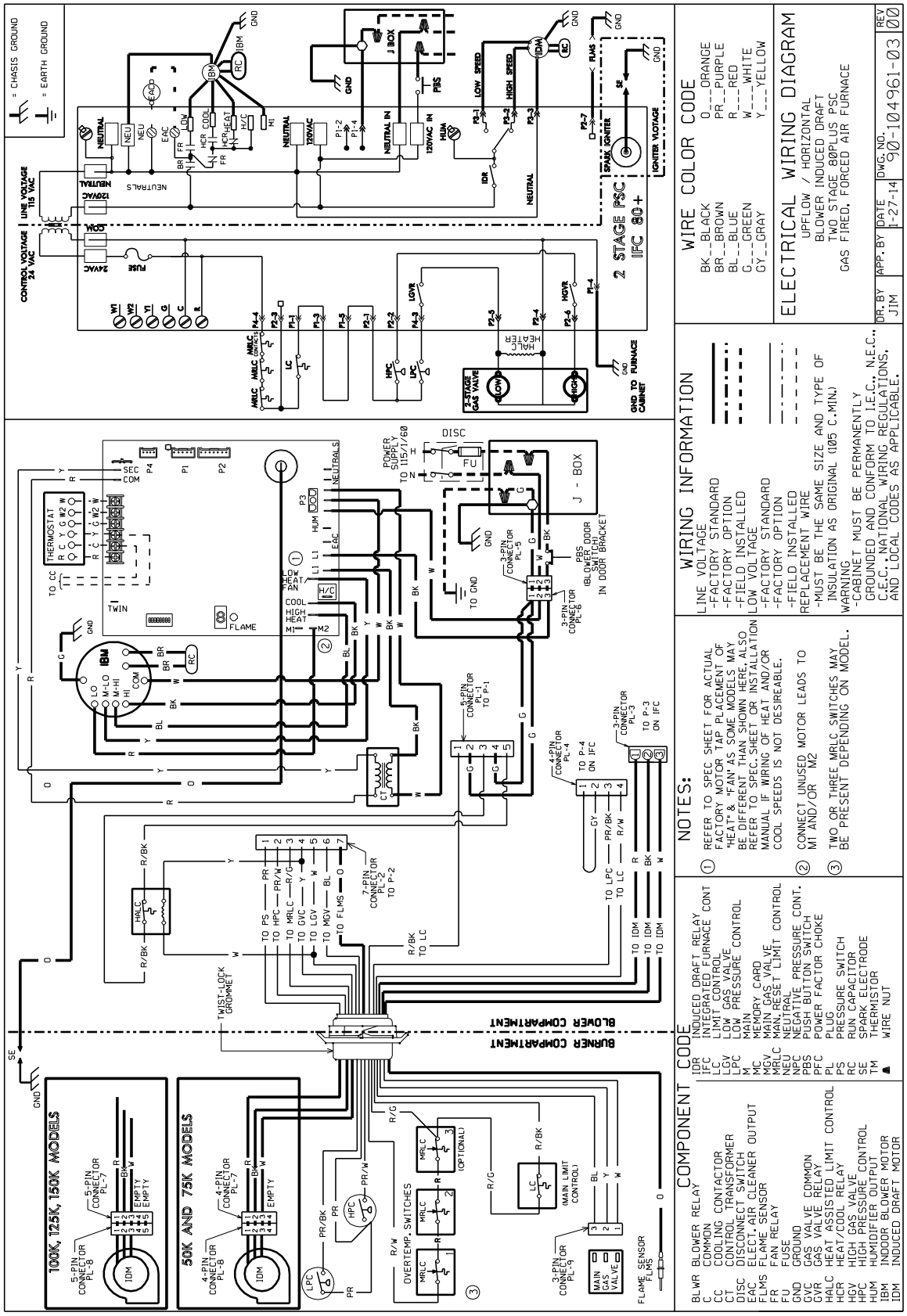
FOR MODELS WITH UT ELECTRONIC CONTROLS 1028-928 INTEGRATED FURNACE CONTROL AND DIRECT SPARK IGNITION