INSTALLATION INSTRUCTIONS

FOR UPFLOW/HORIZONTAL & DOWNFLOW INDUCED DRAFT GAS FURNACES

(-)GPN/(-)GPP UPFLOW/HORIZONTAL SERIES
(-)GLN DOWNFLOW SERIES

member gama

CERTIFIED

DESIGN CERTIFIED

Accredited by the RvA

ABS Quality Evaluations, Inc. ★ Management System Certification ★

ANAB ACCREDITED

ISO 9001:2000

Certificate Number: 30164

RECOGNIZE THIS SYMBOL AS AN INDICATION OF IMPORTANT SAFETY INFORMATION!

⚠ WARNING

IF THE INFORMATION IN THESE INSTRUCTIONS IS NOT FOLLOWED EXACTLY, A FIRE OR EXPLOSION MAY RESULT, CAUSING PROPERTY DAMAGE, PERSONAL INJURY OR DEATH.

⚠ WARNING

THESE INSTRUCTIONS ARE INTENDED AS AN AID TO QUALIFIED SERVICE PERSONNEL FOR PROPER INSTALLATION, ADJUSTMENT AND OPERATION OF THIS UNIT. READ THESE INSTRUCTIONS THOROUGHLY BEFORE ATTEMPTING INSTALLATION OR OPERATION. FAILURE TO FOLLOW THESE INSTRUCTIONS MAY RESULT IN IMPROPER INSTALLATION, ADJUSTMENT, SERVICE OR MAINTENANCE, POSSIBLY RESULTING IN FIRE, ELECTRICAL SHOCK, CARBON MONOXIDE POISONING, EXPLOSION, PROPERTY DAMAGE, PERSONAL INJURY OR DEATH.

⚠ WARNING

PROPOSITION 65 WARNING: THIS PRODUCT CONTAINS CHEMICALS KNOWN TO THE STATE OF CALIFORNIA TO CAUSE CANCER, BIRTH DEFECTS OR OTHER REPRODUCTIVE HARM.

⚠ WARNING

— Do not store or use gasoline or other flammable vapors and liquids, or other combustible materials in the vicinity of this or any other appliance.

— WHAT TO DO IF YOU SMELL GAS
- Do not try to light any appliance.
- Do not touch any electrical switch; do not use any phone in your building.
- Immediately call your gas supplier from a neighbor's phone. Follow the gas supplier's instructions.
- If you cannot reach your gas supplier, call the fire department.
- Do not return to your home until authorized by the gas supplier or fire department.

— DO NOT RELY ON SMELL ALONE TO DETECT LEAKS. DUE TO VARIOUS FACTORS, YOU MAY NOT BE ABLE TO SMELL FUEL GASES.
- U.L. recognized fuel gas and CO detectors are recommended in all applications, and their installation should be in accordance with the manufacturer's recommendations and/or local laws, rules, regulations, or customs.

— Improper installation, adjustment, alteration, service or maintenance can cause injury, property damage or death. Refer to this manual. Installation and service must be performed by a qualified installer, service agency or the gas supplier. In the commonwealth of Massachusetts, installation must be performed by a licensed plumber or gas fitter for appropriate fuel.

BA001-02

DO NOT DESTROY THIS MANUAL. PLEASE READ CAREFULLY AND KEEP IN A SAFE PLACE FOR FUTURE REFERENCE BY A SERVICEMAN.

92-24161-38-05
SUPERSEDES 92-24161-38-04

Before beginning any troubleshooting procedure, complete the following installation checklist. A furnace malfunction is sometimes caused by an improper installation. By completing this checklist, the problem may be found and corrected. Make copies of the checklist and complete one for every Low Profile Furnace service call for your records.

INSTALLATION CHECKLIST

(Refer to this manual for specifics.)

GAS SUPPLY

_____ Adequate pipe size

_____ No gas leaks

_____ Proper supply and manifold gas pressure (check with an accurate U-tube manometer with the furnace and all other gas appliances operating.)

ELECTRICAL

_____ Correct thermostat and subbase _____ Thermostat model _____ Subbase model

_____ Correct thermostat mode and setting

_____ Correct line supply voltage

_____ Correct power supply polarity is required with electronic ignition

_____ Correct furnace ground to electrical panel

_____ DC microamp (µA) flame signal (hot surface ignition units)

_____ Correct control voltage

_____ Measure and set heat anticipator amperage

_____ Air conditioning low voltage wires connected to terminals “Y” “C” - **not with wire nuts**

VENTING

_____ Correct vent pipe diameter and length (according to CSA tables) _____ Vent connection size

_____ Correct venting material (according to CSA tables)

_____ Correct lining for masonry chimneys

_____ Adequate clearance from combustibles

_____ Proper negative pressure reading in the vent

_____ Vent pipe secured to induced draft blower housing

COMBUSTION AIR

_____ Proper source of combustion air

_____ Correct combustion air opening size

_____ Optional attic combustion air pull

_____ Non-attic combustion air pull

FURNACE INSTALLATION

_____ Adequate clearance from combustibles

_____ Adequate clearance for service

_____ Proper air temperature rise (See furnace rating plate)

_____ External static pressure _____ inches w.c.

_____ Correct filter(s)

_____ Correct cooling coil or accessories (if equipped)

_____ Adequate supply and return air ducting _____ Return Air Duct Size _____ Supply Air Duct Size

_____ Air ducts sealed to prevent leakage

Important: All Rheem products meet current Federal OSHA Guidelines for safety. California Proposition 65 warnings are required for certain products, which are not covered by the OSHA standards.

California's Proposition 65 requires warnings for products sold in California that contain, or produce, any of over 600 listed chemicals known to the State of California to cause cancer or birth defects such as fiberglass insulation, lead in brass, and combustion products from natural gas.

All “new equipment” shipped for sale in California will have labels stating that the product contains and/or produces Proposition 65 chemicals. Although we have not changed our processes, having the same label on all our products facilitates manufacturing and shipping. We cannot always know “when, or if” products will be sold in the California market.

You may receive inquiries from customers about chemicals found in, or produced by, some of our heating and air-conditioning equipment, or found in natural gas used with some of our products. Listed below are those chemicals and substances commonly associated with similar equipment in our industry and other manufacturers.

- Glass Wool (Fiberglass) Insulation
- Carbon Monoxide (CO)
- Formaldehyde
- Benzene

More details are available at the Websites for OSHA (Occupational Safety and Health Administration), at www.osha.gov and the State of California's OEHHA (Office of Environmental Health Hazard Assessment), at www.oehha.org. Consumer education is important since the chemicals and substances on the list are found in our daily lives. Most consumers are aware that products present safety and health risks, when improperly used, handled and maintained.

CONTENTS

Installation Check List 2
Safety Information 4
General Information 5
Location Requirements and Considerations 5
Combustion and Ventilation Air 10
Vent Pipe Installation 14
Gas Supply and Piping 17
Electrical Wiring 21
Thermostat 21
Accessories 22
Furnace Twinning 22
High Altitude Installations 25
Start-Up Procedures 28
Air Flow 30
Blower Performance Data 31
Safety Features 33
Maintenance 34
Troubleshooting 37
Wiring Diagrams 38-39

IMPORTANT: *TO INSURE PROPER INSTALLATION AND OPERATION OF THIS PRODUCT, COMPLETELY READ ALL INSTRUCTIONS PRIOR TO ATTEMPTING TO ASSEMBLE, INSTALL, OPERATE, MAINTAIN OR REPAIR THIS PRODUCT. UPON UNPACKING OF THE FURNACE, INSPECT ALL PARTS FOR DAMAGE PRIOR TO INSTALLATION AND START-UP.*

SAFETY INFORMATION

⚠ WARNING

USE ONLY WITH TYPE OF GAS APPROVED FOR THIS FURNACE. REFER TO THE FURNACE RATING PLATE.

⚠ WARNING

INSTALL THIS FURNACE ONLY IN A LOCATION AND POSITION AS SPECIFIED IN THE LOCATION REQUIREMENTS AND CONSIDERATIONS SECTION OF THESE INSTRUCTIONS.

⚠ WARNING

PROVIDE ADEQUATE COMBUSTION AND VENTILATION AIR TO THE FURNACE SPACE AS SPECIFIED IN THE VENTING SECTION OF THESE INSTRUCTIONS.

⚠ WARNING

COMBUSTION PRODUCTS MUST BE DISCHARGED OUTDOORS. CONNECT THIS FURNACE TO AN APPROVED VENT SYSTEM ONLY, AS SPECIFIED IN VENT PIPE INSTALLATION SECTION OF THESE INSTRUCTIONS.

⚠ WARNING

THE MANUFACTURER IS NOT RESPONSIBLE FOR EQUIPMENT THAT IS MISMATCHED OR IMPROPERLY INSTALLED.

⚠ WARNING

NEVER TEST FOR GAS LEAKS WITH AN OPEN FLAME. USE A COMMERCIALLY AVAILABLE SOAP SOLUTION MADE SPECIFICALLY FOR THE DETECTION OF LEAKS TO CHECK ALL CONNECTIONS, AS SPECIFIED IN GAS SUPPLY AND PIPING SECTION OF THESE INSTRUCTIONS.

⚠ WARNING

ALWAYS INSTALL FURNACE TO OPERATE WITHIN THE FURNACE'S INTENDED TEMPERATURE-RISE RANGE WITH A DUCT SYSTEM WHICH HAS AN EXTERNAL STATIC PRESSURE WITHIN THE ALLOWABLE RANGE, AS SPECIFIED IN DUCTING SECTION OF THESE INSTRUCTIONS. SEE ALSO FURNACE RATING PLATE.

⚠ WARNING

WHEN A FURNACE IS INSTALLED SO THAT SUPPLY DUCTS CARRY AIR CIRCULATED BY THE FURNACE TO AREAS OUTSIDE THE SPACE CONTAINING THE FURNACE, THE RETURN AIR SHALL ALSO BE HANDLED BY DUCT(S) SEALED TO THE FURNACE CASING AND TERMINATING OUTSIDE THE SPACE CONTAINING THE FURNACE.

⚠ WARNING

WHEN THIS FURNACE IS INSTALLED IN A RESIDENTIAL GARAGE, IT MUST BE INSTALLED SO THE BURNERS AND IGNITION SOURCE ARE LOCATED NO LESS THAN 18 INCHES ABOVE THE FLOOR. THIS IS TO REDUCE THE RISK OF IGNITING FLAMMABLE VAPORS WHICH MAY BE PRESENT IN A GARAGE. ALSO, THE FURNACE MUST BE LOCATED OR PROTECTED TO AVOID PHYSICAL DAMAGE BY VEHICLES. FAILURE TO FOLLOW THESE WARNINGS CAN CAUSE A FIRE OR EXPLOSION, RESULTING IN PROPERTY DAMAGE, PERSONAL INJURY OR DEATH.

⚠ WARNING

USE OF THIS FURNACE IS ALLOWED DURING CONSTRUCTION IF THE FOLLOWING TEMPORARY INSTALLATION REQUIREMENTS ARE MET. INSTALLATION MUST COMPLY WITH ALL INSTALLATION INSTRUCTIONS INCLUDING:

- **PROPER VENT INSTALLATION;**
- **FURNACE OPERATING UNDER THERMOSTATIC CONTROL;**
- **RETURN AIR DUCT SEALED TO THE FURNACE;**
- **AIR FILTERS IN PLACE;**
- **SET FURNACE INPUT RATE AND TEMPERATURE RISE PER RATING PLATE MARKING;**
- **MEANS FOR PROVIDING OUTDOOR AIR REQUIRED FOR COMBUSTION;**
- **RETURN AIR TEMPERATURE MAINTAINED BETWEEN 55°F (13°C) AND 80°F (27°C); AND**
- **CLEAN FURNACE, DUCT WORK AND COMPONENTS UPON SUBSTANTIAL COMPLETION OF THE CONSTRUCTION PROCESS, AND VERIFY FURNACE OPERATING CONDITIONS INCLUDING IGNITION, INPUT RATE, TEMPERATURE RISE AND VENTING, ACCORDING TO THE INSTRUCTIONS.**

GENERAL INFORMATION

The (-)GPN/(-)GPP/(-)GLN series furnaces are design certified by CSA for use with natural and propane gases as follows:

As a Category I furnace, it may be vented vertically with type B-1 vent pipe and also may be common vented as described in these instructions.

This furnace should be installed in accordance with the American National Standard Z223.1 - latest edition booklet entitled “National Fuel Gas Code” (NFPA 54) (in Canada, CSA B149.1 and .2 Installation Codes for gas burning appliances), and the requirements or codes of the local utility or other authority having jurisdiction including local plumbing or waste water codes.

The National Appliance Energy Conservation Act (NAECA) of 1987 states that any gas furnace manufactured after January 1, 1992, must have a minimum Annual Fuel Utilization Efficiency (AFUE) of 78%. The higher the AFUE percentage the more usable heat energy the consumer gets for every dollar of fuel purchased. This is similar to the EPA's minimum gas mileage requirement for automobiles. It gives the consumer a relatively easy way to make direct efficiency comparisons between different furnace brands and styles.

A high AFUE value, which translates into a low operating cost, is not the only concern that consumers have. They also want a furnace with a reasonable installed cost. They want a furnace that provides them with comfort – their main concern. And they expect a furnace with exceptional reliability and longevity.

Gas furnace manufacturers are always striving to provide consumers with the best furnace value. The Low Profile Furnace addresses all those consumer needs. It gives exceptional efficiency with a low installation cost. It delivers the comfort the customer wants along with the reliability they expect.

The key to all these customer benefits is the furnace's heat exchanger. The materials used to construct the furnace in general and the heat exchanger in particular make it a rugged, long lasting unit. The unique heat exchanger design provides the customer with a furnace only 34 inches high. This gives the consumer a unit easily installed in almost every location that accepts all customary accessories.

With the introduction of higher efficiency furnaces, special attention must be paid to the venting system. Only listed venting systems may be used as stated in the installation instructions and the *National Fuel Gas Code, ANSI Z223.1 (NFPA 54), or the Canadian CAN/CGA B149.1 and B149.2 Installation Codes for Gas Burning Appliances.* Since furnace technology and venting requirements are changing, awareness of local, state, and federal codes and industry changes is imperative.

NOTE: Always perform a proper heat loss calculation before specifying the furnace size. This ensures that the furnace is sized to adequately, economically, heat the building and provide the correct airflow for your application.

IMPORTANT: PROPER APPLICATION, INSTALLATION AND MAINTENANCE OF THIS FURNACE IS A MUST IF CONSUMERS ARE TO RECEIVE THE FULL BENEFITS FOR WHICH THEY HAVE PAID.

Additional helpful publications available from the “National Fire Protection Association” are: NFPA-90A – Installation of Air Conditioning and Ventilating Systems 1985 or latest edition. NFPA-90B – Warm Air Heating and Air Conditioning Systems 1984.

These publications are available from:

National Fire Protection Association, Inc.
Batterymarch Park
Quincy, MA 02269

CSA-INTERNATIONAL
178 Rexdale Blvd.
Etobicoke (Toronto), Ontario
Canada M9W, 1R3

LOCATION REQUIREMENTS AND CONSIDERATIONS

GENERAL INFORMATION

1. **NOTE:** This furnace is shipped with heat exchanger support brackets installed under the back of the heat exchanger. These may be removed before installation, but it is not required.

LOCATION

⚠ WARNING

THIS FURNACE IS NOT APPROVED FOR INSTALLATION IN A MOBILE HOME. DO NOT INSTALL THIS FURNACE IN A MOBILE HOME. INSTALLATION IN A MOBILE HOME COULD CAUSE FIRE, PROPERTY DAMAGE, PERSONAL INJURY OR DEATH.

2. IMPORTANT: *This furnace is not approved or recommended for installation on its back, with access doors facing upwards.*
3. This furnace is suitable for installation in buildings constructed on-site. This heating unit should be centralized with respect to the heat distribution system as much as practicable.
4. **NOTE:** These furnaces are approved for installation in attics, as well as alcoves, utility rooms, closets and crawlspaces.
5. **IMPORTANT**: *Support this unit when installed. For attic or crawl space installation, horizontal furnaces may be installed on combustible wood flooring or by using support brackets. See Figure 1.*
6. **IMPORTANT**: *If installing in a utility room, be sure the door is wide enough to:*
   a. *allow the largest part of the furnace to pass; or*
   b. *allow any other appliance (such as a water heater) to pass.*

FIGURE 1
HORIZONTAL FURNACE INSTALLED W/SUPPORT BRACKETS

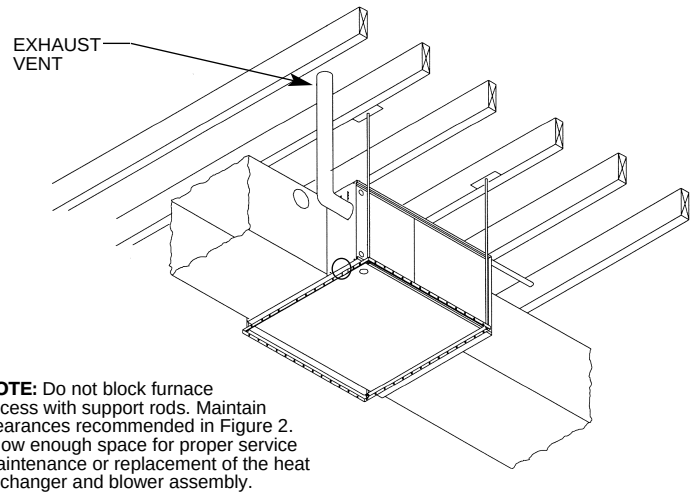

NOTE: Do not block furnace access with support rods. Maintain clearances recommended in Figure 2. Allow enough space for proper service maintenance or replacement of the heat exchanger and blower assembly.

ST-A0799-01

FIGURE 2
UPFLOW/HORIZONTAL DIMENSIONS

CLEARANCE TO COMBUSTIBLE MATERIAL (INCHES) UPFLOW/HORIZONTAL MODELS

								REDUCED CLEARANCE (IN.)					
Model	A	B	C	D	E	F	Left Side	Right Side	Back	Top	Front	Vent	Ship. Wgts.
05	14	$12\frac{27}{32}$	$10\frac{5}{8}$	①	$11\frac{1}{2}$	$1\frac{7}{8}$	0	4②	0	1	3	6③	85 lbs.
07	$17\frac{1}{2}$	$16\frac{11}{32}$	$12\frac{3}{8}$	①	15	$2\frac{1}{2}$	0	3②	0	1	3	6③	105 lbs.
10(A)	$17\frac{1}{2}$	$16\frac{11}{32}$	$12\frac{3}{8}$	①	15	$2\frac{1}{2}$	0	3②	0	1	3	6③	115 lbs.
10(B)	21	$19\frac{27}{32}$	$14\frac{1}{8}$	①	$18\frac{1}{2}$	$2\frac{1}{2}$	0	0	0	1	3	6③	120 lbs.
12	$24\frac{1}{2}$	$23\frac{11}{32}$	$15\frac{7}{8}$	①	22	$2\frac{1}{2}$	0	0	0	1	3	6③	140 lbs.
15	$24\frac{1}{2}$	$23\frac{11}{32}$	$15\frac{7}{8}$	①	22	$2\frac{1}{2}$	0	0	0	1	3	6③	150 lbs.

① May require 3" to 4" or 3" or 5" adapter.
② May be 0" with type B vent.
③ May be 1" with type B vent.

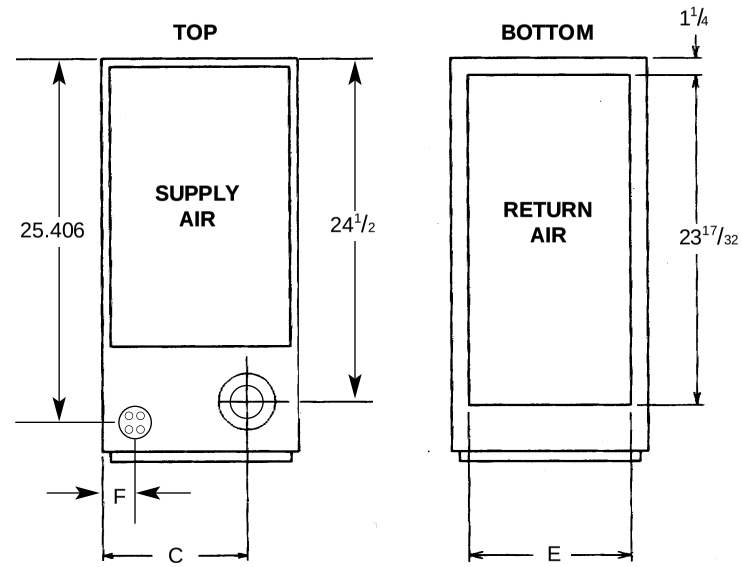

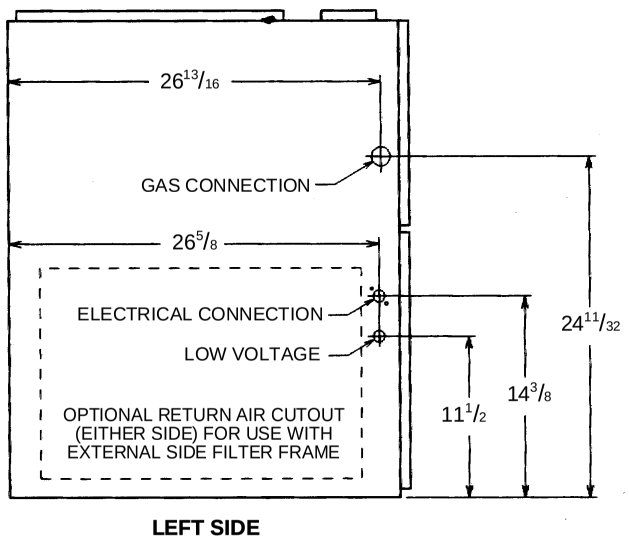

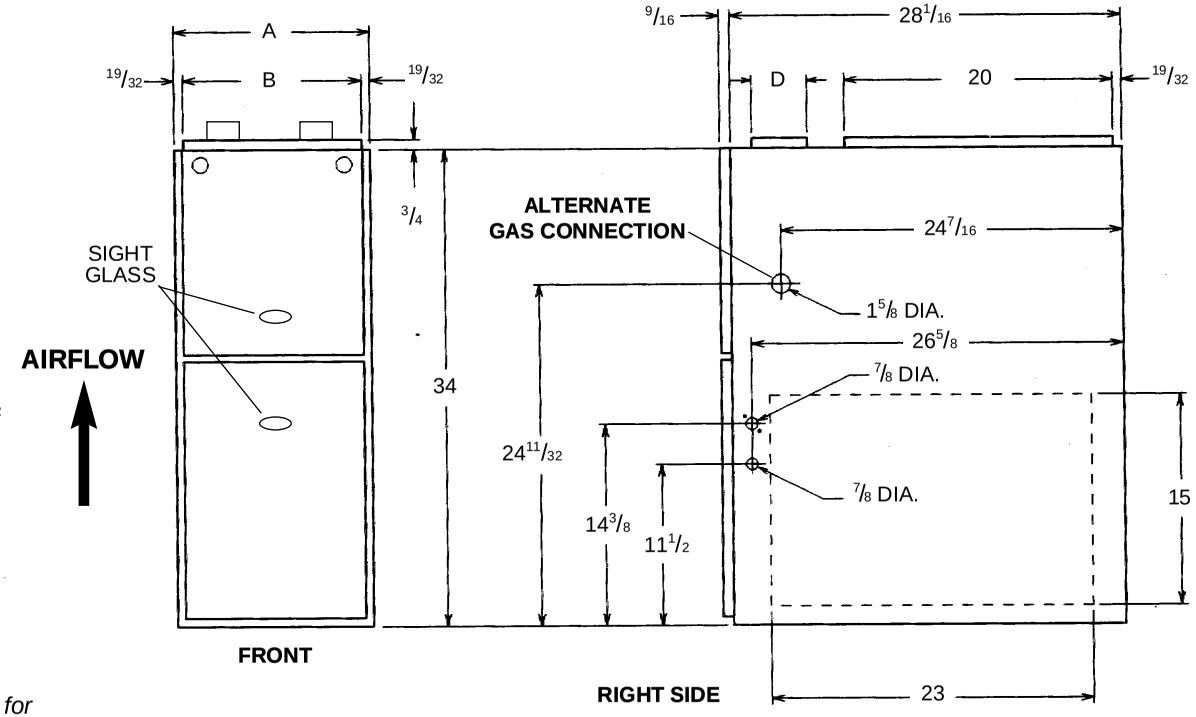

IMPORTANT: *This furnace is not approved or recommended for installation on its back, with access doors facing upwards.*

FIGURE 3
DOWNFLOW DIMENSIONS

CLEARANCE TO COMBUSTIBLE MATERIAL (INCHES) DOWNFLOW MODELS

Model	A	B	C	D	E	Left Side	REDUCED CLEARANCE (IN.) Right Side	Back	Top	Front	Vent	Ship. Wgts.
05	14	12 27/32	10 3/8	①	13 1/8	0	4②	0	1	3	6③	85 lbs.
07	17 1/2	16 11/32	12 1/8	①	16 5/8	0	3②	0	1	3	6③	105 lbs.
10(A)	17 1/2	16 11/32	12 1/8	①	16 5/8	0	3②	0	1	3	6③	115 lbs.
10(B)	21	19 27/32	13 7/8	①	20 1/8	0	0	0	1	3	6③	120 lbs.
12	24 1/2	23 11/32	15 5/8	①	23 5/8	0	0	0	1	3	6③	140 lbs.
15	24 1/2	23 11/32	15 5/8	①	23 5/8	0	0	0	1	3	6③	150 lbs.

① May require 3" to 4" or 3" or 5" adapter.
② May be 0" with type B vent.
③ May be 1" with type B vent.

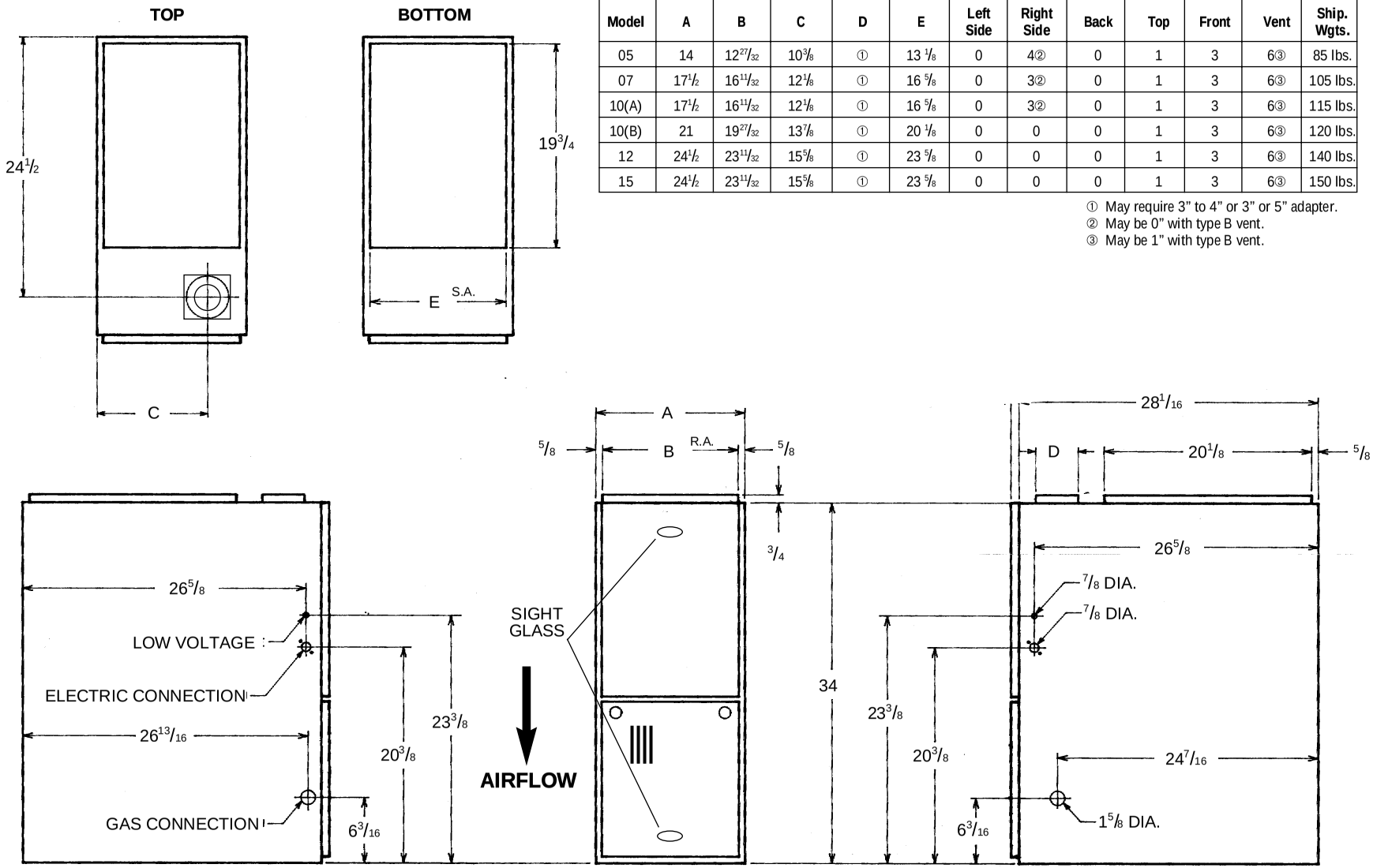

NOTE: IN DOWNFLOW CONFIGURATION, OPTIONAL AIR CUTOUT IS NOT PERMITTED.

CLEARANCE – ACCESSIBILITY

The design of forced air furnaces with input ratings as listed in the tables on the following pages are certified by CSA for the clearances to combustible materials shown in inches.

See name/rating plate and clearance label for specific model number and clearance information.

Service clearance of at least 24 inches is recommended in front of all furnaces.

ACCESSIBILITY CLEARANCES, WHERE GREATER, MUST TAKE PRECEDENCE OVER FIRE PROTECTION CLEARANCES.

⚠ WARNING

UPFLOW AND HORIZONTAL FURNACES MUST NOT BE INSTALLED DIRECTLY ON CARPETING, TILE OR OTHER COMBUSTIBLE MATERIAL OTHER THAN WOOD FLOORING. INSTALLATION ON A COMBUSTIBLE MATERIAL CAN RESULT IN FIRE CAUSING PROPERTY DAMAGE, SEVERE PERSONAL INJURY OR DEATH.

A gas-fired furnace for installation in a residential garage must be installed so that the burner(s) and the ignition source are located not less than 18" above the floor and the furnace is located or protected to avoid physical damage by vehicles.

⚠ WARNING

DOWNFLOW UNIT DESIGN IS CERTIFIED FOR INSTALLATION ON NON-COMBUSTIBLE FLOOR. A SPECIAL COMBUSTIBLE FLOOR SUB-BASE IS REQUIRED WHEN INSTALLING ON A COMBUSTIBLE FLOOR. FAILURE TO INSTALL THE SUB-BASE MAY RESULT IN FIRE, PROPERTY DAMAGE, PERSONAL INJURY OR DEATH. THIS SPECIAL BASE IS OFFERED AS AN ACCESSORY FROM THE FACTORY. SEE THE CLEARANCE LABEL LOCATED INSIDE THE FURNACE FOR THE APPROPRIATE MODEL NUMBER.

THE SPECIAL BASE IS NOT REQUIRED WHEN THE FURNACE IS INSTALLED ON TOP OF AN AIR CONDITIONING PLENUM.

TABLE 1

FURNACE WIDTH	BASE PLATE NO.	BASE PLATE SIZE
14"	RXGB-D14	$11\frac{5}{8}$" x $23\frac{9}{16}$"
$17\frac{1}{2}$"	RXGB-D17	$15\frac{1}{8}$" x $23\frac{9}{16}$"
21"	RXGB-D21	$18\frac{5}{8}$" x $23\frac{9}{16}$"
$24\frac{1}{2}$"	RXGB-D24	$25\frac{5}{8}$" x $23\frac{9}{16}$"

SITE SELECTION

1. Select a site in the building near the center of the proposed, or existing, duct system.
2. Give consideration to the vent system piping when selecting the furnace location. Be sure the venting system can travel from the furnace to the termination with minimal length and elbows.
3. Locate the furnace near the existing gas piping. Or, if running a new gas line, locate the furnace to minimize the length and elbows in the gas piping.
4. Locate the furnace to maintain proper clearance to combustibles as shown in Figures 2 and 3.

⚠ CAUTION

WHEN COILS ARE USED WITH AIR HANDLERS OR FURNACES AND INSTALLED ABOVE A FINISHED CEILING OR LIVING AREA, IT IS RECOMMENDED THAT AN AUXILIARY SHEET METAL CONDENSATE DRAIN PAN BE FABRICATED AND INSTALLED UNDER ENTIRE UNIT. FAILURE TO DO SO CAN RESULT IN PROPERTY DAMAGE. RUN CONDENSATE TO A LOCATION WHERE IT IS NOTICEABLE.

⚠ WARNING

COMBUSTIBLE MATERIAL MUST NOT BE PLACED ON OR AGAINST THE FURNACE JACKET OR WITHIN THE SPECIFIED CLEARANCES OF THE VENT PIPE. THE AREA AROUND THE FURNACE MUST BE KEPT CLEAR AND FREE OF ALL COMBUSTIBLE MATERIALS INCLUDING GASOLINE AND OTHER FLAMMABLE VAPORS AND LIQUIDS. PLACEMENT OF COMBUSTIBLE MATERIALS ON, AGAINST OR AROUND THE FURNACE JACKET CAN CAUSE AN EXPLOSION OR FIRE RESULTING IN PROPERTY DAMAGE, PERSONAL INJURY OR DEATH. THE FURNACE OWNER SHOULD BE CAUTIONED THAT THE FURNACE AREA MUST NOT BE USED AS A BROOM CLOSET OR FOR ANY OTHER STORAGE PURPOSES.

DUCTING

Proper air flow is required for the correct operation of this furnace. Too little air flow can cause erratic operation and can damage the heat exchanger. The duct system must carry the correct amount of air for heating and cooling. Position the unit minimize long runs or runs with many turns and elbows.

Size the ducts according to acceptable industry standards and methods. The total static pressure drop (including evaporator coil, if used) of the entire system should not exceed 0.5" w.c. Be sure to have adequate space for unit filter. **NOTE:** Airflow external static pressure measurements do not include filter or coil.

IMPORTANT: *Some high efficiency filters have a greater than normal resistance to air flow. This can adversely affect furnace operation. BE SURE TO CHECK AIR FLOW if using any filter other than the factory-provided filter.*

NOTE: DO NOT take return air from bathrooms, kitchens, furnace rooms, garages, utility or laundry rooms, or cold areas.

IMPORTANT: *When using outside air, design and adjust the system to maintain a return air temperature* ***above 50°F*** *during the heating season.*

⚠ WARNING

NEVER ALLOW PRODUCTS OF COMBUSTION OR THE FLUE PRODUCTS TO ENTER THE RETURN AIR DUCTWORK, OR THE CIRCULATING AIR SUPPLY. ALL RETURN DUCTWORK MUST BE ADEQUATELY SEALED AND SECURED TO THE FURNACE WITH SHEET METAL SCREWS, AND JOINTS TAPED. WHEN A FURNACE IS MOUNTED ON A PLATFORM, WITH RETURN THROUGH THE BOTTOM, IT MUST BE SEALED AIRTIGHT BETWEEN THE FURNACE AND THE RETURN AIR PLENUM. THE RETURN AIR PLENUM MUST BE PERMANENTLY ENCLOSED. NEVER USE A DOOR AS A PART OF THE RETURN AIR PLENUM. THE FLOOR OR PLATFORM MUST PROVIDE SOUND PHYSICAL SUPPORT OF THE FURNACE, WITHOUT SAGGING, CRACKS, GAPS, ETC., AROUND THE BASE AS TO PROVIDE A SEAL BETWEEN THE SUPPORT AND THE BASE.

FAILURE TO PREVENT PRODUCTS OF COMBUSTION FROM BEING CIRCULATED INTO THE LIVING SPACE CAN CREATE POTENTIALLY HAZARDOUS CONDITIONS, INCLUDING CARBON MONOXIDE POISONING THAT COULD RESULT IN PERSONAL INJURY OR DEATH.

DO NOT, UNDER ANY CIRCUMSTANCES, CONNECT RETURN OR SUPPLY DUCTWORK TO OR FROM ANY OTHER HEAT PRODUCING DEVICE SUCH AS A FIREPLACE INSERT, STOVE, ETC. DOING SO MAY RESULT IN FIRE, CARBON MONOXIDE POISONING, EXPLOSION, PERSONAL INJURY OR PROPERTY DAMAGE.

⚠ WARNING

BLOWER AND BURNERS MUST NEVER BE OPERATED WITHOUT THE BLOWER DOOR IN PLACE. THIS IS TO PREVENT DRAWING GAS FUMES (WHICH COULD CONTAIN HAZARDOUS CARBON MONOXIDE) INTO THE HOME THAT COULD RESULT IN PERSONAL INJURY OR DEATH.

UPFLOW UNITS

1. Set furnace in place and connect the return duct or return air cabinet to unit. Make the connection air-tight to prevent entraining combustion gases from any adjacent fuel-burning appliances. Unit return air may be connected on the sides or bottom of the return air compartment.

   a. Openings in the side must be cut out the full width of the knockouts on the unit. If using side return air, **THE BOTTOM base plate must be installed**.

      NOTE: Where the maximum airflow is 1800 CFM or more, both sides or the bottom must be used for return air.

   b. If using bottom return air, place furnace over return air plenum and seal furnace bottom to return air plenum.

⚠ WARNING

A SOLID METAL BASE PLATE, (SEE TABLE 1) MUST BE IN PLACE WHEN THE FURNACE IS INSTALLED WITH SIDE AIR RETURN DUCTS. FAILURE TO INSTALL A BASE PLATE COULD CAUSE PRODUCTS OF COMBUSTION TO BE CIRCULATED INTO THE LIVING SPACE AND CREATE POTENTIALLY HAZARDOUS CONDITIONS, INCLUDING CARBON MONOXIDE POISONING OR DEATH.

2. If summer air conditioning is desired, position the indoor coil on the supply air side of the furnace. Insure that no air can bypass this coil.
3. Connect the supply air plenum to the furnace plenum opening.

DOWNFLOW UNITS

⚠ WARNING

THE DOWNFLOW FURNACE DESIGN IS CERTIFIED FOR INSTALLATION ON A NON-COMBUSTIBLE FLOOR. IF INSTALLED ON A COMBUSTIBLE FLOOR, USE THE SPECIAL BASE SPECIFIED ON THE FURNACE CLEARANCE LABEL. FAILURE TO INSTALL THE SPECIAL BASE MAY RESULT IN FIRE, PROPERTY DAMAGE, PERSONAL INJURY OR DEATH. THIS SPECIAL BASE IS SHIPPED FROM THE FACTORY AS AN ACCESSORY.

1. Position the unit over the supply air plenum and connect.
   a. If installing on a combustible floor **and not using an evaporator coil box,** install the special combustible floor base. See Figure 4.
   b. If summer air conditioning is desired, position the indoor coil on the bottom of the unit. Insure that no air can bypass this coil.
2. Connect the return air ducting to the return air opening at the top of the unit. Make the connection air tight to prevent entraining combustion gases from an adjacent fuel-burning appliance.

HORIZONTAL UNITS

1. Unit can be mounted left or right side airflow configuration.
2. Position the unit on adequate supports or by using support brackets (see Figure 1) and connect supply plenum.
3. If summer air conditioning is desired, position the indoor coil on the supply air side of the unit. Insure that no air can bypass this coil.
4. Secure the four angle brackets shipped with the unit to the return air opening. See Figure 5. Connect the return air ducting to the return air opening at the top of the unit. Make the connection air tight to prevent entraining combustion gases from an adjacent fuel-burning appliance.

NOTE: Do not block furnace access with support rods. Maintain clearances recommended in Figure 2. Allow enough space for proper service maintenance or replacement of the heat exchanger and blower assembly.

FIGURE 4
COMBUSTIBLE FLOOR BASE

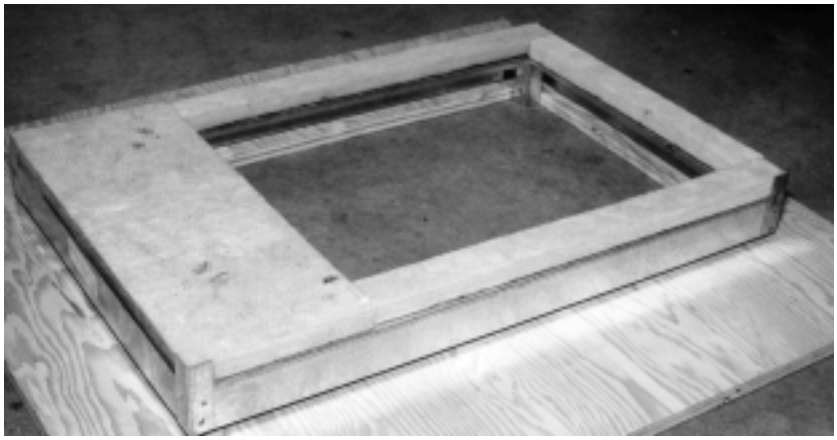

FIGURE 5
HORIZONTAL RETURN AIR DUCT
(LEFT-HAND AIRFLOW POSITION SHOWN)

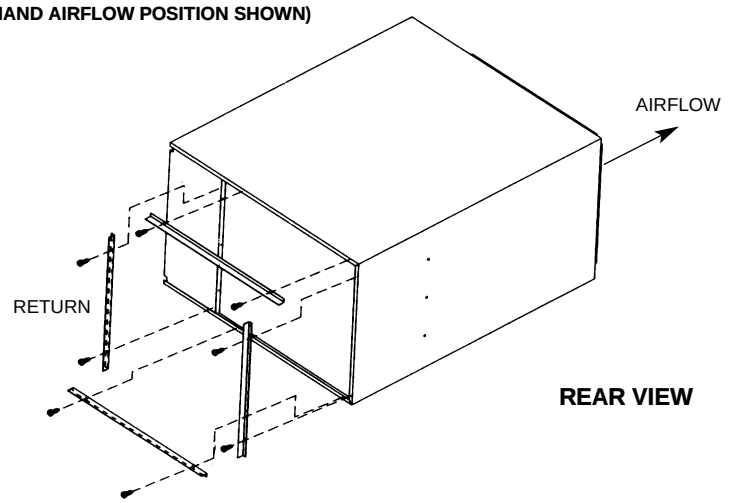

FOUR ANGLE BRACKETS ARE SHIPPED WITH EACH UNIT THAT CAN BE INSTALLED HORIZONTALLY. THESE BRACKETS MAY BE USED TO SECURE THE RETURN AIR DUCT TO A HORIZONTAL UNIT.

COMBUSTION AND VENTILATION AIR

***IMPORTANT:** This is not a direct vent furnace. Review venting instructions before installing.*

⚠ WARNING

THIS FURNACE AND ANY OTHER FUEL-BURNING APPLIANCE MUST BE PROVIDED WITH ENOUGH FRESH AIR FOR PROPER COMBUSTION AND VENTILATION OF THE FLUE GASES. MOST HOMES WILL REQUIRE THAT OUTSIDE AIR BE SUPPLIED INTO THE FURNACE AREA. FAILURE TO DO SO CAN CAUSE DEATH FROM CARBON MONOXIDE POISONING.

Adequate facilities for providing air for combustion and ventilation must be provided in accordance with section 5.3, Air for Combustion and Ventilation, of the National Fuel Gas Code, ANSI, Z223.1 latest edition or CSA B149.1 and .2 or, applicable provisions for the local building codes, and not obstructed so as to prevent the flow of air to the furnace.

COMBUSTION AIR REQUIREMENTS

IMPORTANT: *Air for combustion and ventilation must not come from a corrosive atmosphere. Any failure due to corrosive elements in the atmosphere is excluded from warranty coverage.*

The following types of installation may require OUTDOOR AIR for combustion, due to chemical exposures:

- Commercial buildings
- Buildings with indoor pools
- Furnaces installed in laundry rooms
- Furnaces in hobby or craft rooms
- Furnaces installed near chemical storage areas.

Exposure to the following substances in the combustion air supply may also require OUTDOOR AIR for combustion:

- Permanent wave solutions
- Chlorinated waxes and cleaners
- Chlorine-based swimming pool chemicals
- Water softening chemicals
- De-icing salts or chemicals
- Carbon tetrachloride
- Halogen type refrigerants
- Cleaning solvents (such as perchloroethylene)
- Printing inks, paint removers, varnishes, etc.
- Hydrochloric acid
- Cements and glues
- Antistatic fabric softeners for clothes dryers
- Masonry acid washing materials

FIGURE 6
AIR FROM HEATED SPACE

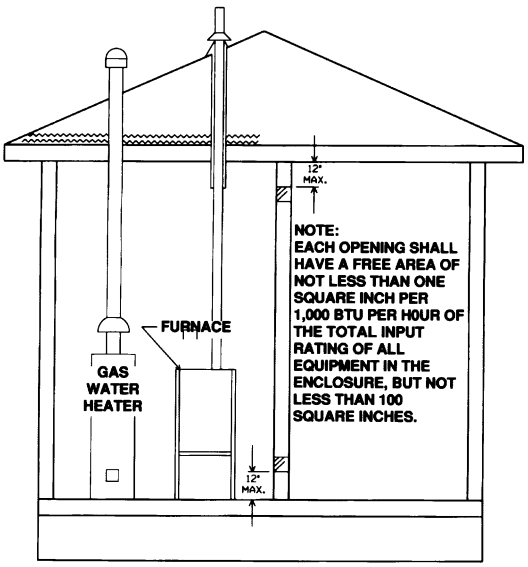

Combustion air must be free of acid forming chemicals; such as sulphur, fluorine and chlorine. These elements are found in aerosol sprays, detergents, bleaches, cleaning solvents, air fresheners, paint and varnish removers, refrigerants and many other commercial and household products. Vapors from these products when burned in a gas flame form acid compounds. The acid compounds increase the dew point temperature of the flue products and are highly corrosive after they condense.

⚠ WARNING

ALL FURNACE INSTALLATIONS MUST COMPLY WITH THE NATIONAL FUEL GAS CODE AND LOCAL CODES TO PROVIDE ADEQUATE COMBUSTION AND VENTILATION AIR FOR THE FURNACE. FAILURE TO DO SO CAN CREATE HAZARDOUS CONDITIONS RESULTING IN PROPERTY DAMAGE, BODILY INJURY OR DEATH FROM SMOKE, FIRE OR CARBON MONOXIDE.

Combustion air requirements are determined by whether the furnace is in an open (unconfined) area or in a confined space such as a closet or small room. See Figures 6 and 7.

EXAMPLE 1.
FURNACE LOCATED IN AN UNCONFINED SPACE

Using indoor air for combustion.

An unconfined space must have at least 50 cubic feet for each 1,000 BTUH of the total input for all appliances in the space. Here are a few examples of the room sizes required for different inputs. The sizes are based on 8 foot ceilings.

BTUH Input	Minimum Sq. Feet With 8' Ceiling	Typical Room Size With 8' Ceiling
50,000	312	14*x24* or 18*x18*
75,000	469	15*x31* or 20*x24*
100,000	625	20*x31* or 25*x25*
125,000	833	23*x34* or 26*x30*
150,000	938	25*x38* or 30*x31*

If the open space containing the furnace is in a building with tight construction (contemporary construction), outside air may still be required for the furnace to operate and vent properly. Outside air openings should be sized the same as for a confined space.

FIGURE 7
AIR FROM ATTIC/CRAWL SPACE

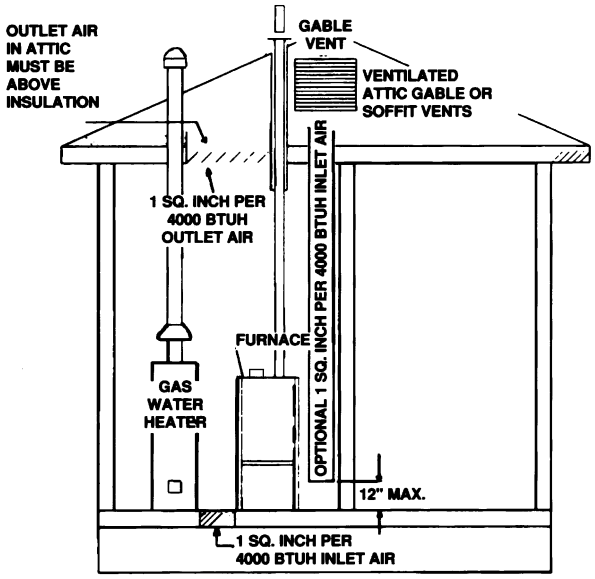

EXAMPLE 2.
FURNACE LOCATED IN A CONFINED SPACE

A confined space (any space smaller than shown above as "unconfined") must have openings into the space which are located in accordance with the requirements set forth in the following subsections A and B. Size the openings by how they are connected to the heated area or to the outside, and by the input of all appliances in the space.

If confined space is within a building with tight construction, combustion air must be taken from outdoors or area freely communicating with the outdoors.

A. USING INDOOR AIR FOR COMBUSTION, ALL OF THE MODELS (GPN, GPP, GLN)

IMPORTANT: *Air should not be taken from a heated space with a fireplace, exhaust fan or other device that may produce a negative pressure.*

If combustion air is taken from the heated area, the openings must each have at least 100 square inches of free area. Each opening must have at least one square inch of free area for each 1,000 Btuh of total input in the space. Here are some examples of typical openings required.

Btuh Input	Free Area Each Opening
100,000	100 Square Inches
150,000	150 Square Inches

AIR INTAKE PIPE CONNECTION (GPN, GPP ONLY)

A double-elbow may be installed to top inlet air opening, BUT IS NOT REQUIRED. This will help to prevent accidental blockage of the intake opening. Reference Figure 8 for proper elbow diameter.

NOTE: Inlet is specifically designed to prevent material from being pulled into furnace. If elbows are not used, the intake opening must be kept clean and free of debris.

It is also acceptable to run the condensate drain (or refrigerant) line access over the air intake hole as long as a 1" minimum clearance is maintained.

B. USING OUTDOOR AIR FOR COMBUSTION, ALL OF THE MODELS (GPN, GPP, GLN)

IMPORTANT: *Never take combustion air from an attic space that is equipped with power ventilation.*

The confined space must communicate with the outdoors according to Methods 1 and 2. The minimum air opening dimension shall not be less than 3 inches. When using ducts, they shall be of the same cross-sectional area as the free area of the openings to which they connect.

FIGURE 8
COMBUSTION AIR FITTING – NON-ATTIC COMBUSTION AIR PULL, GPN & GPP ONLY

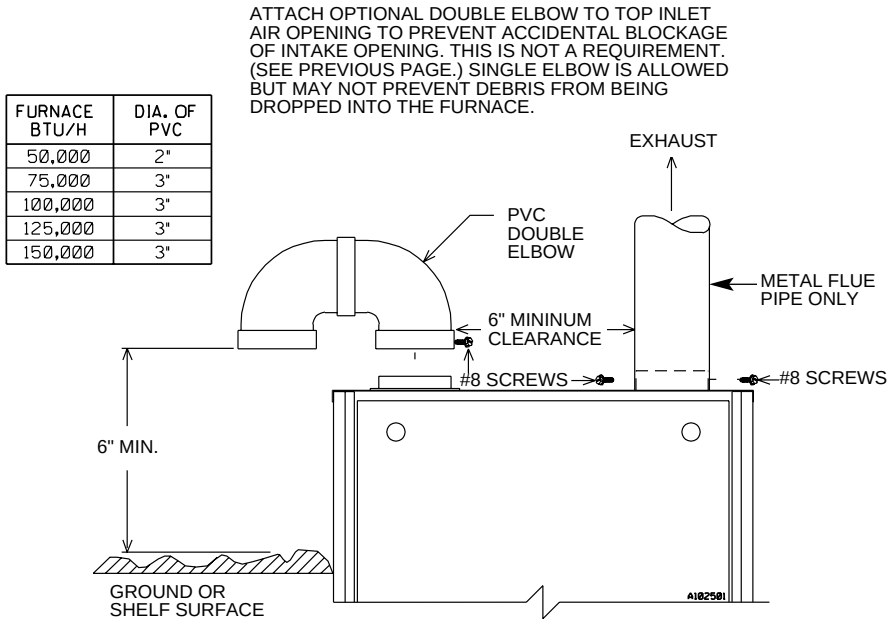

FURNACE BTU/H	DIA. OF PVC
50,000	2"
75,000	3"
100,000	3"
125,000	3"
150,000	3"

B: Method 1

Provide two permanent openings, one located within 12 inches of the top and one located within 12 inches of the bottom of the enclosure. Each opening shall communicate directly, or by ducts, with the outdoors or spaces (crawl or attic) that freely communicate with the outdoors.

a. Where directly communicating with the outdoors or where communicating to the outdoors through **VERTICAL DUCTS,** each opening shall have a minimum free area of **1 square inch for each 4000 BTUH** of total appliance input rating in the enclosure. Here are typical duct sizes:

VERTICAL OUTDOOR AIR OPENING DIMENSIONS

BTUH Input	Free Area Each Opening	Round Pipe Size
50,000	12.50 sq. inches	4”
75,000	18.75 sq. inches	5”
100,000	25.00 sq. inches	6”
125,000	31.25 sq. inches	7”
150,000	37.50 sq. inches	7”

b. Where communicating with outdoors through **HORIZONTAL DUCTS,** each opening shall have a minimum free area of **1 square inch for each 2000 BTUH** of total input rating for all equipment in the enclosure. Here are typical duct sizes:

HORIZONTAL OUTDOOR AIR OPENING DIMENSIONS

BTUH Input	Free Area Each Opening	Round Pipe Size
50,000	25.00 sq. inches	6”
75,000	37.50 sq. inches	7”
100,000	50.00 sq. inches	8”
125,000	62.50 sq. inches	9”
150,000	75.00 sq. inches	10”

B: Method 2

One permanent opening, located within 12 inches of the top of the enclosure, shall be permitted where the equipment has clearances of at least 1 inch from the sides and back and 6 inches from the front of the appliance. The opening shall directly communicate with the outdoors or communicate through a vertical or horizontal duct to the outdoors or spaces (crawl or attic) that freely communicate with the outdoors and have a minimum free area of:

a. One square inch for each 3000 BTUH of the total input rating of all equipment located in the enclosure, **AND**

b. Not less than the sum of the areas of all vent connectors in the confined space.

IMPORTANT: *If the furnace is in a location with an exhaust fan, there must be sufficient ventilation to prevent the exhaust fan from creating a negative pressure in the room.*

Combustion air openings must **NOT BE RESTRICTED** in any manner.

CONSULT LOCAL CODES FOR SPECIAL REQUIREMENTS.

B: Method 3, GPN and GPP only

For the optimum in quiet operation, attic air may be brought directly to the furnace.

IMPORTANT: In applications using Method 3 for combustion air, the attic must be ventilated by gable or soffit vents. See Figure 7.

⚠ CAUTION

COMBUSTION AIR INTAKES CANNOT BE TERMINATED OUTSIDE. DOING SO CAN CAUSE IMPROPER OPERATION OF THE FURNACE.

FIGURE 9
OUTSIDE AIR USING A HORIZONTAL INLET & OUTLET

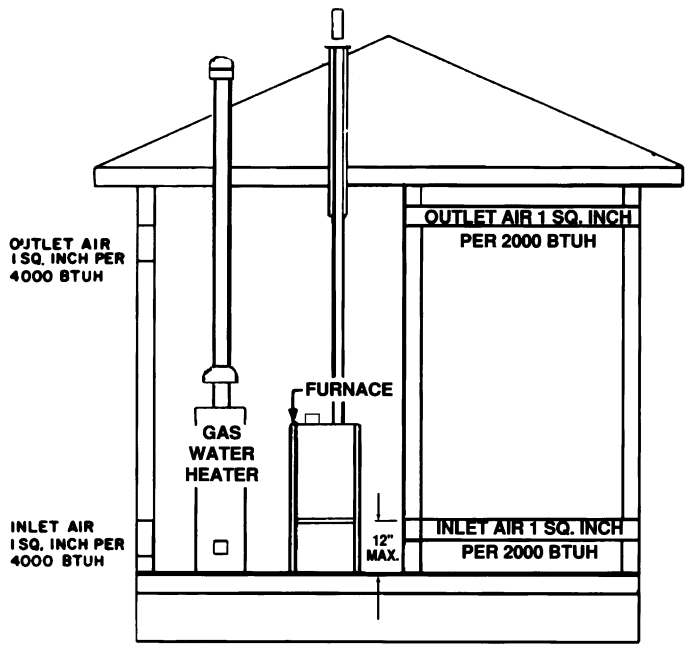

If attic combustion air is used, the inlet air opening at the furnace must be protected from accidental blockage. Install a 90° elbow pointing horizontally at the top of inlet air pipe. See Figure 10 (maximum of 2, 45° or 90° elbows, allowed).

NOTE: Maximum length of pipe that may be used for combustion air is 10 feet with two elbows. Lengths of more than 10 feet can result in nuisance pressure switch trips.

FIGURE 10
COMBUSTION AIR FITTING – OPTIONAL ATTIC COMBUSTION AIR PULL, GPN & GPP ONLY

FURNACE BTU/H	DIA. OF PVC
50,000	2"
75,000	3"
100,000	3"
125,000	3"
150,000	3"

ATTACH A 90° ELBOW TO TOP INLET AIR OPENING TO PREVENT ACCIDENTAL BLOCKAGE OF INTAKE OPENING.

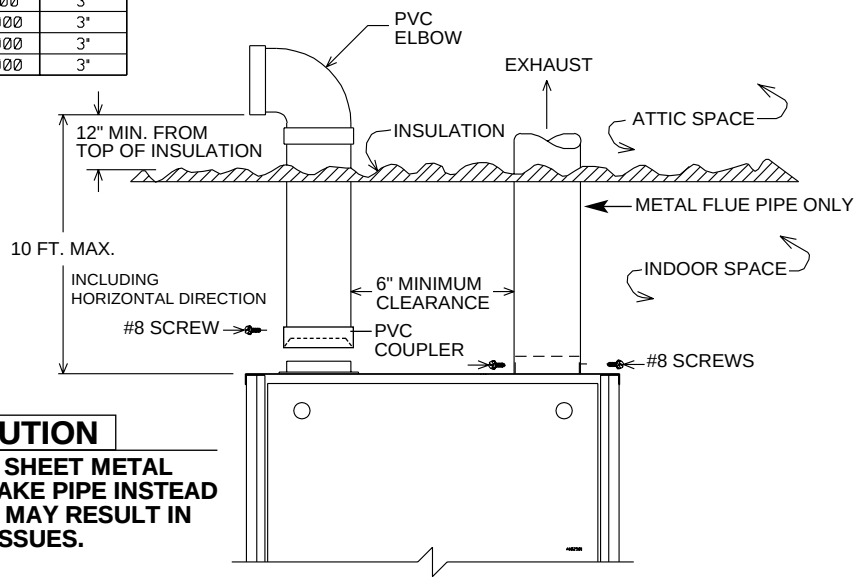

⚠ CAUTION

USE OF SHEET METAL AIR INTAKE PIPE INSTEAD OF PVC MAY RESULT IN NOISE ISSUES.

VENTING

GENERAL INFORMATION

The furnace must be vented in accordance with these instructions, National Fuel Gas Code, ANSI Z223.1 and/or the Natural Gas Installation Code, CSA-B149.1 & .2 and requirements or codes of the local utility or other authority having jurisdiction.

⚠ WARNING

DEVICES ATTACHED TO THE FLUE OR VENT FOR THE PURPOSE OF REDUCING HEAT LOSS UP THE CHIMNEY HAVE NOT BEEN TESTED AND HAVE NOT BEEN INCLUDED IN THE DESIGN CERTIFICATION OF THIS FURNACE. WE, THE MANUFACTURER, CANNOT AND WILL NOT BE RESPONSIBLE FOR INJURY OR DAMAGE CAUSED BY THE USE OF SUCH UNTESTED AND/OR UNCERTIFIED DEVICES, ACCESSORIES OR COMPONENTS.

DRAFT INDUCER

⚠ WARNING

VENT PIPE ATTACHING HOLES MUST BE PREDRILLED IN THE DRAFT INDUCER COLLAR TO PREVENT DAMAGING THE INDUCER. DRILL 1/8" DIAMETER HOLES THROUGH THE VENT PIPE AND COLLAR AND USE #8 SCREWS TO ATTACH. SEE FIGURE 11. FAILURE TO FOLLOW THIS WARNING CAN CAUSE RECIRCULATION OF FLUE PRODUCTS CAUSING CARBON MONOXIDE POISONING RESULTING IN PERSONAL INJURY OR DEATH.

FIGURE 11
ATTACHING TO DRAFT INDUCER COLLAR

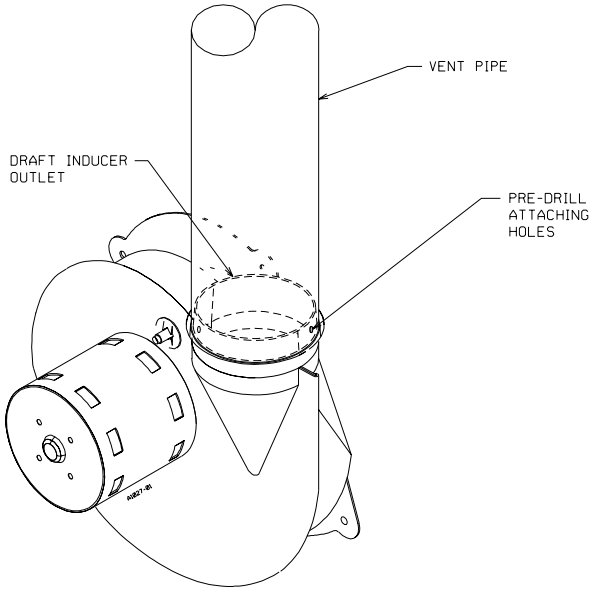

A0991-01

FURNACE CATEGORY INFORMATION

This furnace is shipped as a Category I type induced draft furnace. A Category I furnace operates with a nonpositive vent pressure and has a vent gas temperature at least 140°F above the dew point of the vent gases. A Category I type may be a draft hood equipped furnace or have a fan assisted combustion system (induced draft). The inducer is used to pull flue products through the combustion chamber and as they leave the furnace, most of the energy has been dissipated. The buoyant effect of the flue gases provides venting to the outdoors.

During the off cycle, the inducer is off and there is very little flow through the vent, cooling the vent. During the on cycle there is no dilution airflow, as with a draft hood type furnace. Although the vent heats up rapidly without dilution air, the flue products contain more water vapor, which results in a higher dew point temperature. It is most **important** that you follow the guidelines in these instructions to prevent the possible formation of condensation in the venting system.

As a Category I furnace it may be vented vertically with type B-1 vent pipe and also may be common vented, as described in these instructions.

IMPORTANT APPLICATION NOTES

When the furnace is used as a replacement, the existing vent system should be inspected to assure that there are no obstructions, blockage, or any signs of corrosion and is properly sized for use with this furnace.

NOTE: When the vent table permits more than one diameter of pipe for a connector or vent, the smallest permitted diameter must be used.

Vent pipe may be type “B-1,” either rigid or suitable flexible construction that carries a u.l. listing.

Common venting is allowed with vertical B-1 vent systems, and lined masonry chimneys. Follow the National Fuel Gas Code, ANSI Z223.1 and/or the Natural Gas Installation Code, CSA-B149.1 & .2 for proper installation practices.

NOTE: Follow combustion air instructions as outlined in this manual.

Single wall vent connectors to “B-1 vent or masonry chimneys” may be used under the guidelines of the National Fuel Gas Code, ANSI Z223.1 and/or the Natural Gas Installation Code, CSA-B149.1 & .2.

The entire length of the vent connector shall be readily accessible for inspection, cleaning and replacement.

"B-1" VERTICAL VENTING

Type "B-1" vents must be installed in accordance with the terms of their listings and the vent manufacturer's instructions.

"B-1" vents must be supported and spaced in accordance with their listings and the manufacturer's instructions. All vents must be supported to maintain their minimum clearances from combustible material.

VERTICAL VENTING	
Input	**Categorized Furnace Vent Size Required**
50K	3"
75K	*4"
100K	*4"
125K	*5"
150K	*5"

*NOTE: All furnaces have a 3" vent connection as shipped from the factory. A 3" to 4" or 3" to 5" vent transition is required on all but the 50,000 BTUH models when vertically vented or common vented with metal vent pipes. **THE VENT TRANSITION CONNECTION MUST BE MADE AT THE FURNACE VENT EXIT.** It must originate with an adapter if required, at the furnace flue collar and terminate either in a listed cap or roof assembly. When common venting, the vent connector size may differ from the above diameters depending on application. See ANSI Z21.47-1993/CSA-2.3-M93 or latest edition tables.

VERTICAL VENT SYSTEMS:

1. A gas vent shall terminate above the roof surface with a listed cap or listed roof assembly. Gas vents 12 inches in size or smaller with listed caps shall be permitted to be terminated in accordance with Figure 12, provided they are at least 8 feet from a vertical wall or similar obstruction. All other gas vents shall terminate not less than 2 feet above the highest point where they pass through the roof and at least 2 feet higher than any portion of a building within 10 feet.
2. A type B-1 gas vent shall terminate at least 5 feet in vertical height above the highest connected equipment draft hood or flue collar.
3. Must rise ¼" per foot away from the furnace on horizontal runs and be supported with straps or hangers so it has no sags or dips. Supports at 4 foot intervals and at all elbows are recommended.
4. The vent connector must be mechanically fastened to the outlet collar of the furnace with at least (2) sheet metal screws except vent connectors that are B-1 material. These shall be assembled in accordance with the manufacturer's instructions. See Figure 11.
5. Any angle greater than 45 degrees from the vertical is considered horizontal. The total horizontal distance of a vent plus the horizontal vent connector serving draft-hood equipped appliances shall not be greater than 75 percent of the vertical height of the vent.

NOTE: Refer to the National Fuel Gas Code, ANSI Z223.1 and/or the Natural Gas Installation Code, CSA-B149.1 & .2.

Single appliance venting of a fan assisted furnace into a tile-lined masonry chimney is prohibited. The chimney must be lined with either Type B vent or with a listed, single wall, metal lining system. Reference National Fuel Gas Code, ANSI Z223.1 and/or the Natural Gas Installation Code, CSA-B149.1 & .2. See Figure 13 for typical B-1 vent chase.

FIGURE 12
TYPICAL VENTING WITH "B-1" VENT

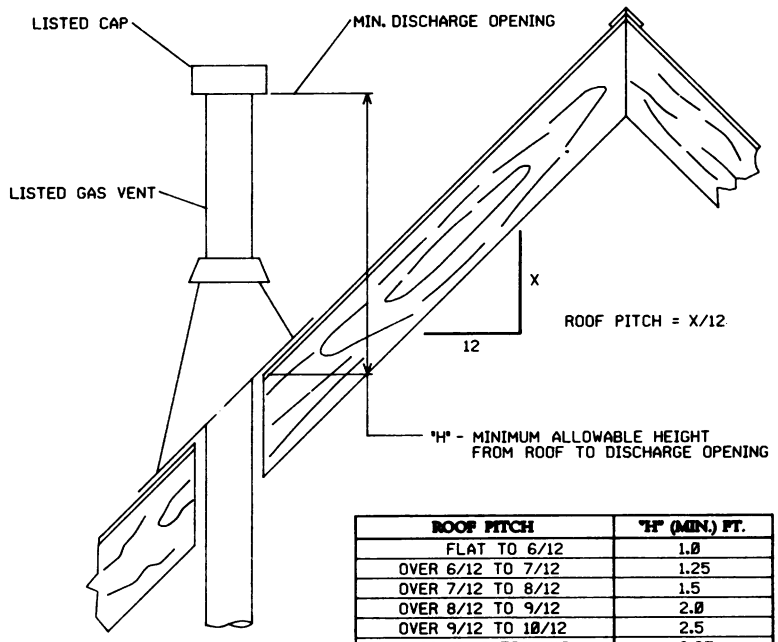

ROOF PITCH	"H" (MIN.) FT.
FLAT TO 6/12	1.0
OVER 6/12 TO 7/12	1.25
OVER 7/12 TO 8/12	1.5
OVER 8/12 TO 9/12	2.0
OVER 9/12 TO 10/12	2.5
OVER 10/12 TO 11/12	3.25
OVER 11/12 TO 12/12	4.0
OVER 12/12 TO 14/12	5.0
OVER 14/12 TO 16/12	6.0
OVER 16/12 TO 18/12	7.0
OVER 18/12 TO 20/12	7.5
OVER 20/12 TO 21/12	8.0

⚠ WARNING

DO NOT CONNECT THIS FURNACE TO A CHIMNEY USED TO VENT A SOLID FUEL APPLIANCE (WOOD OR COAL). VENTING WITH A SOLID FUEL APPLIANCE CAN LEAD TO IMPROPER FUNCTIONING OF THE UNIT, AND DUE TO SOOTING, THE POSSIBILITY OF FIRE RESULTING IN PROPERTY DAMAGE, PERSONAL INJURY OR DEATH.

SPECIAL VENT SYSTEMS (SVS)

IMPORTANT: *It is THE FURNACE MANUFACTURER's position now that new installations of any HTPV pipe used in a category III vent application, including Selkirk's Selvent™ II HTPV product, should cease immediately.*

POWER VENT SYSTEMS

When vertical venting is not possible, the only acceptable method for horizontal venting is with the use of Tjernlund model GPAK-1TR or Field Controls models SWG-4R power venter. Type B vent pipe and fittings must be used. Common venting is not permitted

All application and installation instructions supplied with the power venter must be followed.

Please address all questions regarding power venter installation, agency listings and furnace model compatibility to:

Tjernlund Products, Inc.
(800) 255-4208 or (612) 426-2993

Field Controls L.L.C.
(800) 742-8368 or (919) 522-0214

EXISTING VENT SYSTEMS

IMPORTANT RETROFIT VENTING INSTRUCTIONS

If this furnace is a replacement installation, **ALWAYS INSPECT** the existing vent system to be sure there are no obstructions, blockages, or signs of corrosion.

When the existing furnace is removed from a venting system serving other appliances, the venting is likely to be too large to properly vent the remaining attached appliances.

The following steps shall be followed with each appliance that remains connected to the common venting system, while the other appliances that remain connected to the common venting systems are not in operation.

NOTE: When the vent table permits more than one diameter of pipe for a connector or vent, the smallest permitted diameter must be used.1. Seal any unused openings in the common venting system.

1. Visually inspect the venting system for proper size and horizontal pitch and determine that there is no blockage, restriction, leakage, corrosion or other deficiencies which could cause an unsafe condition.
2. Insofar as is practical, close all building doors, windows and all doors between the space where the appliances remaining connected to the common venting system are located. Turn on clothes dryers and any appliance not connected to the common venting system. Turn on any exhaust fans, such as range hoods and bathroom exhausts, so they will operate at maximum speed. Do not operate a summer exhaust fan. Close fireplace dampers.
3. Follow the lighting instructions. Place the appliance being inspected into operation. Adjust the thermostat so the appliance will operate continuously.
4. Test for spillage at the draft hood relief opening after 5 minutes of main burner operation. Use the flame of a match or candle, or smoke from a cigarette, cigar, or pipe.
5. After it has been determined that each appliance that remains connected to the common venting system properly vents (when tested as outlined above) return doors, windows, exhaust fans, fireplace dampers and any other gas-burning appliance to their previous conditions of use.
6. If improper venting is observed during any of the above tests, the common venting system must be resized. Refer to National Fuel Gas Code, ANSI Z223.1 and/or the Natural Gas Installation Code, CSA-B149.1 & .2.

FIGURE 13
DEDICATED VENTING THROUGH CHIMNEY WITH "B-1" VENT

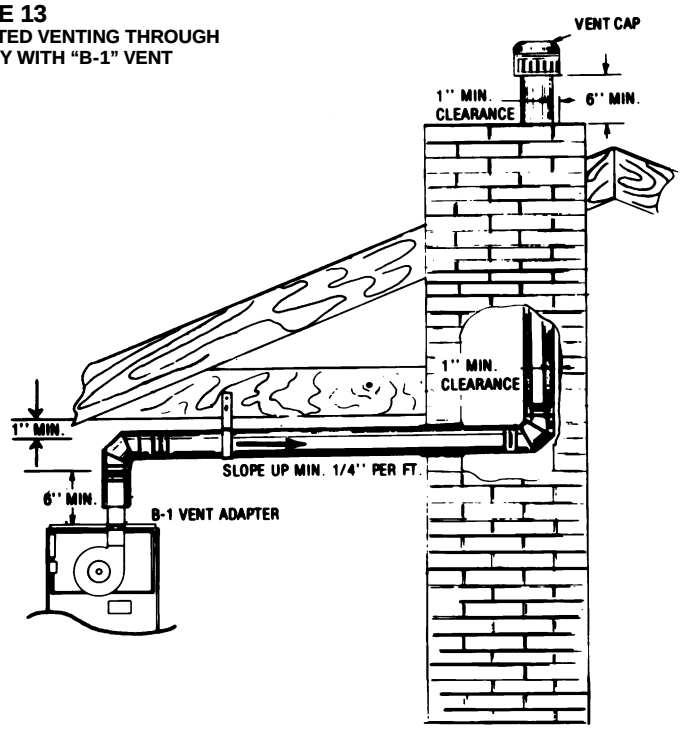

GAS SUPPLY AND PIPING

GAS SUPPLY

⚠ WARNING

THIS FURNACE IS EQUIPPED AT THE FACTORY FOR USE ON NATURAL GAS ONLY. CONVERSION TO LP GAS REQUIRES A SPECIAL KIT AVAILABLE FROM THE DISTRIBUTOR. FAILURE TO USE THE PROPER CONVERSION KIT CAN CAUSE FIRE, CARBON MONOXIDE POISONING, EXPLOSION, PROPERTY DAMAGE, PERSONAL INJURY OR DEATH.

See the conversion kit index supplied with the furnace. This index identifies the proper LP Gas Conversion Kit required for each particular furnace.

IMPORTANT: *Any additions, changes or conversions required for the furnace to satisfactorily meet the application should be made by a qualified installer, service agency or the gas supplier, using factory-specified or approved parts. In the commonwealth of Massachusetts, installation must be performed by a licensed plumber or gas fitter for appropriate fuel.*

IMPORTANT: *Connect this furnace only to gas supplied by a commercial utility.*

IMPORTANT: *A U.L. recognized fuel gas and CO detector(s) are recommended in all applications, and their installation should be in accordance with the detector manufacturer's recommendations and/or local laws, rules, regulations or customs.*

FIGURE 14
GAS PIPING INSTALLATION

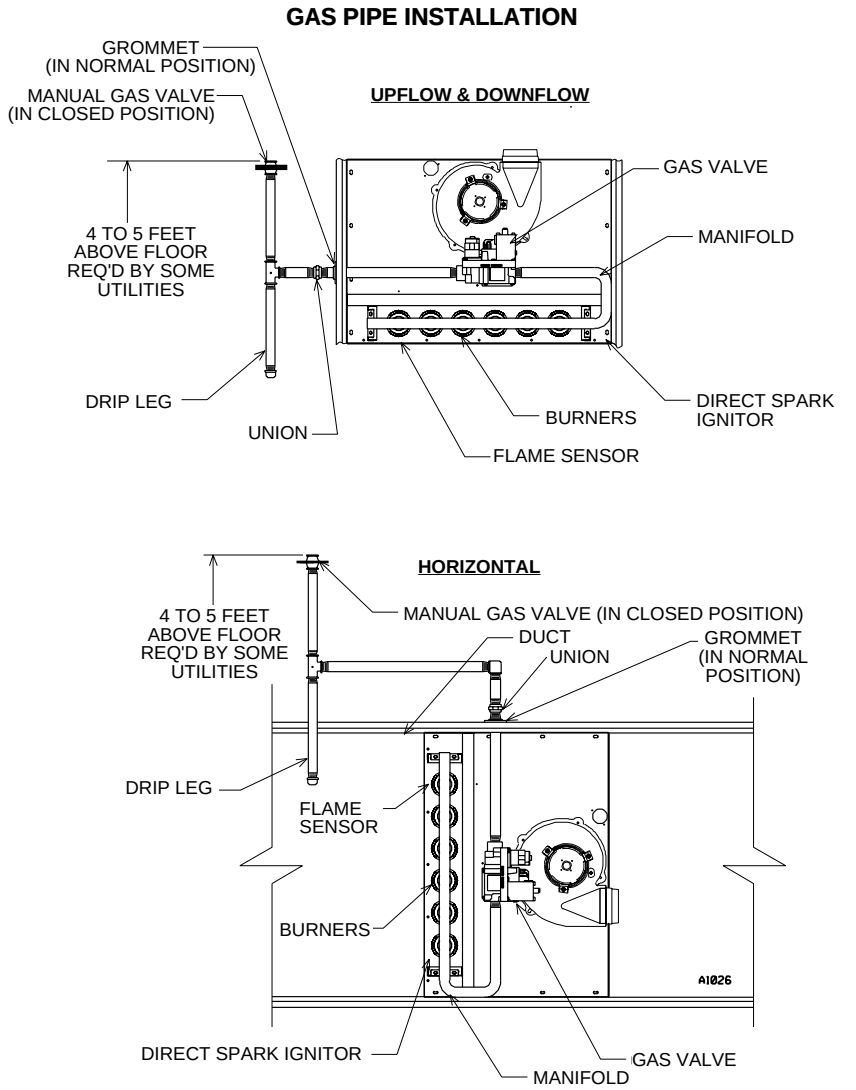

GAS PIPING (SEE FIGURE 14)

Install the gas piping according to all local codes, state codes and regulations of the utility company, whichever holds jurisdiction.

If possible, run a separate gas supply line directly from the meter to the furnace. Consult the local gas company for the location of the manual main shut-off valve. **The gas line and manual gas valve must be adequate in size to prevent undue pressure drop and never smaller than the pipe size to the combination gas valve on the furnace.** Refer to Table 2 for the recommended pipe size for natural gas and Table 3 for LP gas pipe sizes.

IMPORTANT: *It is permissible to run flexible gas connector inside the unit to a piece of black pipe. If local codes allow the use of a flexible gas appliance connector, always use a new listed connector. Do not use a connector which has previously serviced another gas appliance. Massachusetts law limits flexible gas connectors to a maximum of 36".*

Install a ground joint union outside the cabinet to easily remove the control valve assembly. Install a manual shut-off valve in the gas line outside the furnace casing. The valve should be readily accessible to turn the gas supply on or off. Install a drip leg in the gas supply line as close to the furnace as possible. Always use a pipe compound resistant to the action of liquefied petroleum gases on all threaded connections.

IMPORTANT: *When making gas pipe connections, use a back-up wrench to prevent any twisting of the control assembly and gas valve. Do not overtighten the connection.*

Any strains on the gas valve can change the position of the gas orifices in the burners. This can cause erratic furnace operation.

IMPORTANT: *ENSURE that the furnace gas control valve not be subjected to high gas line supply pressures.*

DISCONNECT the furnace and its individual shut-off valve from the gas supply piping during **any pressure testing that exceeds 1/2 PSIG (3.48 kPa).**

GAS PRESSURE

IMPORTANT: *The maximum gas supply pressure to the furnace should be 10.5" w.c. for natural gas and 13" w.c. for LP gas.*

Natural gas supply pressure should operate between 5" to 10.5**"** w.c. LP gas supply pressure should be 11**"** to 13**"** w.c. **This pressure must be maintained with all other gas-fired appliances in operation.**

NOTE: Do not exceed a gas pressure of 13" w.c.

⚠ CAUTION

ELEVATIONS ABOVE 2000 FT REQUIRE THAT THE FURNACE INPUT RATING BE ADJUSTED AND THAT THE SIZE OF THE BURNER ORIFICES BE RE-CALCULATED BASED ON ELEVATION AND GAS HEATING VALUE. THE BURNER ORIFICES MAY (OR MAY NOT) NEED TO BE CHANGED. SEE THE SECTION TITLED "HIGH ALTITUDE INSTALLATIONS" OF THIS BOOK FOR INSTRUCTIONS.

⚠ WARNING

NEVER PURGE A GAS LINE INTO THE COMBUSTION CHAMBER. NEVER USE MATCHES, FLAME OR ANY IGNITION SOURCE FOR CHECKING LEAKAGE. FAILURE TO FOLLOW THIS WARNING CAN CAUSE AN EXPLOSION OR FIRE RESULTING IN PROPERTY DAMAGE, PERSONAL INJURY OR DEATH.

To check for gas leakage, use an approved chloride-free soap and water solution, an electronic combustible gas detector, or other approved method.

LP CONVERSION

NOTE: For installation, see specific LP kit installation instructions.

The valve can be converted to use liquefied petroleum (LP) gas by replacing the pressure regulator spring with the conversion kit spring. This LP kit spring allows the regulator to maintain the proper adjusted manifold pressure for LP gas. The correct burner LP orifices are included in the kit.

NOTE: Order the correct LP conversion kit from the local distributor. Furnace conversion to LP gas must be performed by a qualified technician.

⚠ CAUTION

ELEVATIONS ABOVE 2000 FT REQUIRE THAT THE FURNACE INPUT RATING BE ADJUSTED AND THAT THE SIZE OF THE BURNER ORIFICES BE RE-CALCULATED BASED ON ELEVATION AND GAS HEATING VALUE. THE BURNER ORIFICES MAY (OR MAY NOT) NEED TO BE CHANGED. SEE THE SECTION TITLED "HIGH ALTITUDE INSTALLATIONS" OF THIS BOOK FOR INSTRUCTIONS.

NOx MODELS

When converting furnaces equipped with NOx inserts to LP gas, remove the NOx insert assemblies. Steps for removal are listed below:

1. Turn off all electrical power and the gas supply to the furnace.
2. Remove the burner door from the furnace.
3. Remove the igniter assembly – **handle with care.**
4. Remove the two screws attaching the NOx insert retainer brackets to the center panel. Pull the retainer rod.
5. Put the two screws back into the holes in the center panel.
6. Re-install the igniter and burner assemblies.
7. Replace burner door.
8. Turn on electrical power and gas supply to the unit.

NOTE: Some NOx models may have one less NOx insert.

SETTING GAS PRESSURE

The maximum gas supply pressure to the furnace should be 10.5" w.c. natural gas, or 13" w.c. LP gas. The minimum supply gas pressure to the gas valve should be 5" w.c. natural gas or 11" w.c. LP gas. A properly calibrated manometer is required for accurate gas pressure measurements.

⚠ CAUTION

ELEVATIONS ABOVE 2000 FT REQUIRE THAT THE FURNACE INPUT RATING BE ADJUSTED AND THAT THE SIZE OF THE BURNER ORIFICES BE RE-CALCULATED BASED ON ELEVATION AND GAS HEATING VALUE. THE BURNER ORIFICES MAY (OR MAY NOT) NEED TO BE CHANGED. SEE THE SECTION TITLED "HIGH ALTITUDE INSTALLATIONS" OF THIS BOOK FOR INSTRUCTIONS.

Supply Gas Pressure Measurement. A line pressure tap is on the inlet side of the gas valve.

1. With gas shut off to the furnace at the manual gas valve outside the unit, remove the input pressure tap plug.
2. Connect a U-Tube manometer to the pressure tap. See Figure 15.
3. Turn on the gas supply and operate the furnace and all other gas-fired units on the same gas line as the furnace.
4. Adjust the line gas pressure to supply:
   A. 5" - 10.5" w.c. for natural gas.
   B. 11" - 13" w.c. for LP gas.
5. Shut off the gas at the manual gas valve and remove the U-Tube manometer.
6. Replace the pressure tap plug before turning on the gas.

NATURAL GAS:
If the supply gas line pressure is above the operating range, install an in-line gas regulator to the furnace. If supply gas line pressure is below the operating range, either remove any restrictions in the gas supply piping or enlarge the gas pipe. See Table 2.

LP GAS:
If the supply gas line pressure is above the operating range, have the LP supplier reduce the line pressure at the regulator. If supply gas line pressure is below operating range, have the LP supplier adjust the line pressure at the regulator. See Table 3.

NOTE: Depending on the amount of LP vapor and the outdoor ambient temperature, the LP storage tank may require supplemental heat to maintain proper pressure levels. Ensure LP storage tank does not drop below 15% capacity during heating season.

FIGURE 15
TYPICAL HOSE CONNECTION TO LINE PRESSURE TAP

TABLE 2
NATURAL GAS PIPE CAPACITY TABLE (CU. FT./HR.)

Capacity of gas pipe of different diameters and lengths in cu. ft. per hr. with pressure drop of 0.3 in. and specific gravity of 0.60 (natural gas).

Nominal Iron Pipe Size, Inches	Length of Pipe, Feet							
	10	20	30	40	50	60	70	80
1/2	132	92	73	63	56	50	46	43
3/4	278	190	152	130	115	105	96	90
1	520	350	285	245	215	195	180	170
1-1/4	1,050	730	590	500	440	400	370	350
1-1/2	1,600	1,100	890	760	670	610	560	530

After the length of pipe has been determined, select the pipe size which will provide the minimum cubic feet per hour required for the gas input rating of the furnace. By formula:

$$\text{Cu. Ft. Per Hr. Required} = \frac{\text{Gas Input of Furnace (BTU/HR)}}{\text{Heating Value of Gas (BTU/FT3)}}$$

The gas input of the furnace is marked on the furnace rating plate. The heating value of the gas (BTU/FT3) may be determined by consulting the local natural gas utility or the LP gas supplier.

TABLE 3
LP GAS PIPE CAPACITY TABLE (CU. FT./HR.)

Maximum capacity of pipe in thousands of BTU per hour of undiluted liquefied petroleum gases (at 11 inches water column inlet pressure).
(Based on a Pressure Drop of 0.5 Inch Water Column)

Nominal Iron Pipe Size, Inches	Length of Pipe, Feet											
	10	20	30	40	50	60	70	80	90	100	125	150
1/2	275	189	152	129	114	103	96	89	83	78	69	63
3/4	567	393	315	267	237	217	196	182	173	162	146	132
1	1,071	732	590	504	448	409	378	346	322	307	275	252
1-1/4	2,205	1,496	1,212	1,039	913	834	771	724	677	630	567	511
1-1/2	3,307	2,299	1,858	1,559	1,417	1,275	1,181	1,086	1,023	976	866	787
2	6,221	4,331	3,465	2,992	2,646	2,394	2,205	2,047	1,921	1,811	1,606	1,496

Example (LP): Input BTU requirement of unit, 150,000
Equivalent length of pipe, 60 ft. = 3/4" IPS required.

ADJUSTING OR CHECKING FURNACE INPUT

⚠ CAUTION

ELEVATIONS ABOVE 2000 FT REQUIRE THAT THE FURNACE INPUT RATE BE ADJUSTED AND THAT THE SIZE OF THE BURNER ORIFICES BE RE-CALCULATED BASED ON ELEVATION AND GAS HEATING VALUE. THE BURNER ORIFICES MAY (OR MAY NOT) NEED TO BE CHANGED. SEE THE SECTION TITLED "HIGH ALTITUDE INSTALLATIONS" OF THIS BOOK FOR INSTRUCTIONS.

NATURAL GAS:
The maximum gas supply pressure to the furnace should be 10.5" W.C. for natural gas. The minimum gas supply pressure for purposes of input adjustment to the furnace should be 5" W.C.

A properly calibrated manometer or gauge is required for accurate gas pressure readings.

The manifold pressure should be set at 3.5" W.C. for natural gas. Only small variations in the gas flow should be made by means of the pressure regulator adjustment.

To adjust the pressure regulator:

1. Remove the regulator cap.
2. Turn the adjustment screw clockwise to increase pressure or counterclockwise to decrease pressure.
3. Replace the regulator cap securely.

LP GAS:
Furnaces for use on LP gas, the LP gas supply pressure must be set between 11.0" and 13.0" W.C. by means of the tank or branch supply regulators. The furnace manifold pressure should be set at 10" W.C. at the gas control valve. For elevations up to 8,000 feet, rating plate input ratings apply. For high altitudes (elevations 8,000 and over) and for any necessary major changes in the gas flow rate the orifice spud must be changed.

TO CHANGE ORIFICE SPUDS:

1. Shut off the manual main gas valve and remove the gas manifold.
2. Replace the orifice spuds.
3. Reassemble in reverse order.
4. Turn the gas supply back on and check for leaks.
5. Check for proper operation and manifold pressure.

Check of input is important to prevent over firing of the furnace beyond its design-rated input. NEVER SET INPUT ABOVE THAT SHOWN ON THE RATING PLATE.

TO CHECK FURNACE INPUT:

1. Make certain that all other gas appliances are shut off, with the exception of pilot burners.
2. Start the furnace
3. Time the meter to measure the time required to burn one cubic foot of gas.
4. Use Table 4 to determine input rate.

TABLE 4

METER TIME IN MINUTES AND SECONDS FOR NORMAL INPUT RATING OF FURNACES EQUIPPED FOR NATURAL OR LP GAS

INPUT BTU/HR	METER SIZE CU. FT.	HEATING VALUE OF GAS BTU PER CU. FT.									
		900		1000		1040		1100		2500	
		MIN.	SEC.	MIN.	SEC.	MIN.	SEC.	MIN.	SEC.	MIN.	SEC.
50,000	ONE	1	5	1	12	1	15	1	18	3	20
	TEN	10	50	12	00	12	30	13	12	30	00
75,000	ONE	0	44	0	48	0	50	0	53	2	0
	TEN	7	12	8	0	8	19	8	48	20	0
100,000	ONE	0	33	0	36	0	38	0	40	1	30
	TEN	5	24	6	0	6	15	6	36	15	0
125,000	ONE	0	26	0	29	0	30	0	32	1	12
	TEN	4	19	4	48	5	0	5	17	12	0
150,000	ONE	0	31	0	24	0	25	0	26	1	0
	TEN	3	36	4	0	4	10	4	20	10	0

$$\text{Input BTU/HR} = \frac{\text{Heating Value of Gas (BTU/Ft}^3\text{) x 3600 x correction factor}}{\text{Time in Seconds (for 1 cu.ft.) of Gas}}$$

ELECTRICAL WIRING

⚠ WARNING

TURN OFF ELECTRIC POWER AT THE FUSE BOX OR SERVICE PANEL BEFORE MAKING ANY ELECTRICAL CONNECTIONS.

ALSO, THE GROUND CONNECTION MUST BE COMPLETED BEFORE MAKING LINE VOLTAGE CONNECTIONS. FAILURE TO DO SO CAN RESULT IN ELECTRICAL SHOCK, SEVERE PERSONAL INJURY OR DEATH.

IMPORTANT: *The furnace must be installed so that the electrical components are protected from water due to improper flue installation or evaporator condensate drain run-off, etc.*

ELECTRICAL CONNECTIONS

⚠ WARNING

THE CABINET MUST BE PERMANENTLY GROUNDED. A GROUND SCREW IS PROVIDED IN THE JUNCTION BOX FOR THIS PURPOSE. FAILURE TO DO SO CAN RESULT IN FIRE, ELECTRICAL SHOCK, PERSONAL INJURY OR DEATH.

The electrical supply requirements are listed on the furnace rating plate.

Use a separate fused branch electrical circuit containing a properly sized fuse or circuit breaker. Run this circuit directly from the main switch box to an electrical disconnect which must be readily accessible and located within sight of the furnace. Connect from the disconnect to the junction box on the left side of the furnace, inside the control compartment. See appropriate wiring diagram.

NOTE: The electrical junction box inside the furnace control compartment may be relocated to the right side if necessary. A knockout is provided.

NOTE: L1 (hot) and neutral polarity must be observed when making field connections to the furnace. The ignition control on electric ignition models will not sense flame if L1 and neutral are reversed.

Installation of the electric supply line should be in accordance with the National Electric Code ANSI/NFPA No. 70, latest edition, or Canadian Electrical Code Part 1 - CSA Standard C22.1 and local building codes.

This can be obtained from:

National Fire Protection Association
Batterymarch Park
Quincy, MA 02269

Canadian Standards Association
178 Rexdale Blvd.
Etobicoke (Toronto), Ontario
Canada M9W, 1R3

FIGURE 16
ISOLATION RELAY

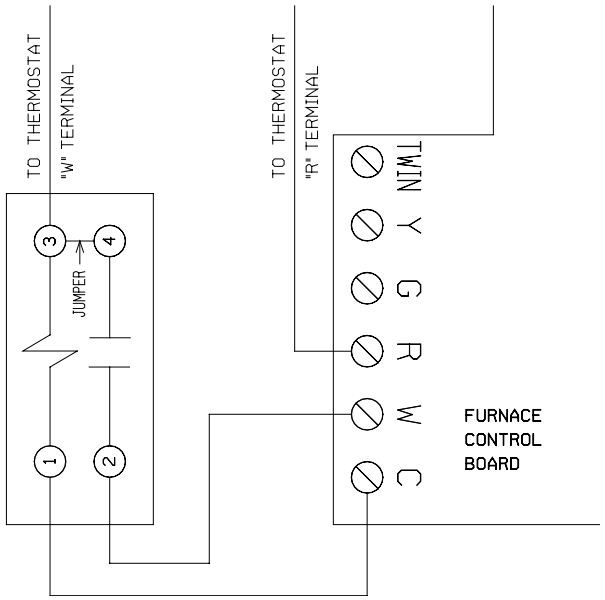

THERMOSTAT

The room thermostat must be compatible with the integrated furnace control on the furnace. Generally, all thermostats that are not of the “current robbing” type are compatible with the integrated furnace control used.

NOTE: An isolation relay (part number 42-25104-01) may assist with “current robbing” type thermostat compatibility problems. Use a single-pole, single-throw relay with a 24-volt AC coil. The contacts should be rated for .5 amps minimum at 24 volts. See Figure 16.

Install the room thermostat in accordance with the instruction sheet in the box with the thermostat. Run the thermostat lead wires inside the control compartment. Connect the thermostat as shown on the wiring diagram. Never install the thermostat on an outside wall or where it will be influenced by drafts, concealed hot or cold water pipes, lighting fixtures, radiation from fireplace, rays of sun, lamps, television, radios or air streams from registers. Refer to the instructions packed with the thermostat for best anticipator adjustment or selection or see below.

HEAT ANTICIPATOR SETTINGS

For adjusting the thermostat heat anticipator setting; (a) add the current draw of the various components in the system or (b) using jumper wire, measure the current flow between the R and W thermostat circuits. Set the thermostat heat anticipator according to the current flow measured.

TABLE 5
FIELD WIRE SIZE FOR 24 VOLT CONTROL CIRCUITS

	SOLID COPPER WIRE - AWG			
THERMOSTAT LOAD - AMPS	3.0	16	14	12
	2.5	16	14	12
	2.0	18	16	14
		50	100	150
		LENGTH OF RUN - FEET ①		

① Wire length equals twice the run distance

NOTE: Do not use 24 volt control wiring smaller than No. 18.

FIGURE 17
LINE VOLTAGE CONNECTIONS

UT ELECTRONIC CONTROLS 1028-928 CONTROL BOARD

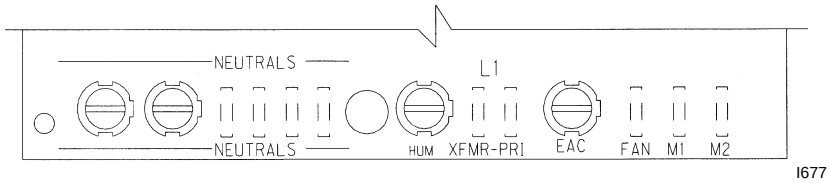

UT ELECTRONIC CONTROLS 1097-200 CONTROL BOARD

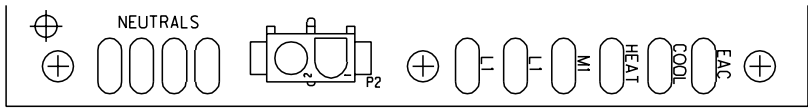

FIELD INSTALLED OPTION ACCESSORIES

ELECTRONIC AIR CLEANER
Electronic air cleaner line voltage power can be supplied from the screw terminal “EAC” and a line voltage neutral screw terminal on the control board. Power is on any time the blower is activated. See Figure 17.

HUMIDIFIER
Humidifier line voltage power can be supplied from screw terminal “HUM” to a line voltage neutral screw terminal on the control board. See Figure 17. This will power the humidifier whenever the inducer is operating in the heating mode.

NOTE: There is no “HUM” terminal on GPP models.

NOTE: Maximum current –1.0 amps for each option.

FOSSIL FUEL KIT
Refer to specification sheet for approved fossil fuel kit number.

RXGW-B01 CHIMNEY ADAPTER

IMPORTANT: *CHIMNEY ADAPTER IS CERTIFIED FOR USE ON UPFLOW (-GPN AND -GPP) ONLY.*

This appliance is CSA certified for use with RXGW-B01 Chimney Adapter. Refer to Kit Installation Instructions 92-101682-01.

FURNACE TWINNING INSTALLATIONS

IMPORTANT: *ONLY TWIN FURNACES WITH IDENTICAL CONTROL BOARDS.*

IMPORTANT: *TWINNING OF (-)GPP UNITS REQUIRES AN ACCESSORY TWINNING KIT. REFER TO THE FURNACE SPECIFICATION SHEET FOR PROPER KIT. DO NOT ATTEMPT TO TWIN THESE MODELS BY USING THE INSTRUCTIONS BELOW.*

IMPORTANT: *ONLY BOTTOM RETURNS CAN BE USED. NO MORE THAN TWO FURNACES CAN SHARE THE SAME SUPPLY AND RETURN. FURNACES MUST HAVE SAME HEATING AND BLOWER CAPACITY. TWINNING FURNACES MUST OPERATE OFF THE SAME PHASE OF POWER.*

NOTE: Limit of two furnaces per thermostat.

Twinning operation of two furnaces, installed side-by-side, connected by a common duct system with main power supplied by the same source, and controlled by a common thermostat can be done with the UT ELECTRONIC CONTROLS 1028-928 integrated control boards.

The “OK” LED will blink five times if twinning is not set up properly.

UT ELECTRONIC CONTROLS 1028-928 CONTROL BOARD

1. Single Stage Operation
   (See Figure 16)
   a. Control board "ONE" is on furnace connected to the thermostat.
   b. The 24 VAC supply to both control boards must be in phase with each other.
   c. Connect the "C," "W" and "TWIN" terminals to counterparts on each control.
   d. Both control boards must have switch #3 in the "ON" position.
2. Two Stage Operation
   (See Figure 17)
   a. Follow above instructions. Connect "W2" on thermostat to "W" on control board "TWO".

FIGURE 18

UT Electronic Controls 1028-928 CONTROL BOARD, TWINNING CONNECTION -- SINGLE STAGE OPERATION

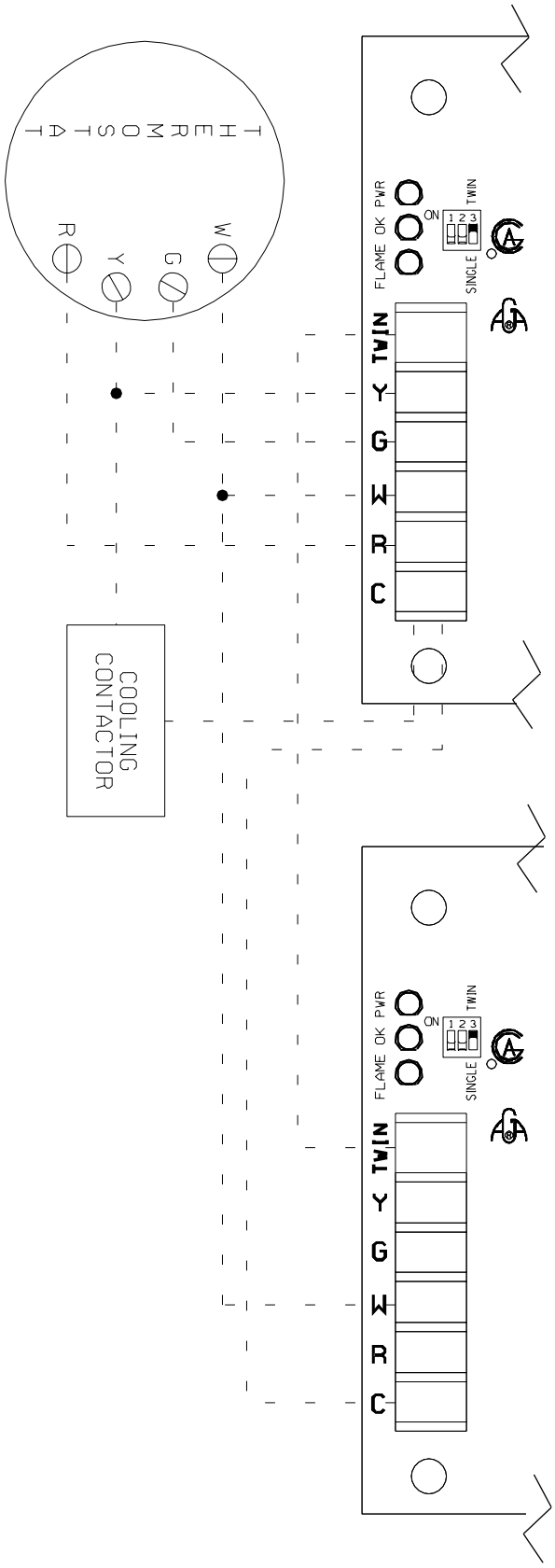

a099201

FIGURE 19

UTEC 1028-928 CONTROL BOARD, TWINNING CONNECTION -- TWO-STAGE OPERATION

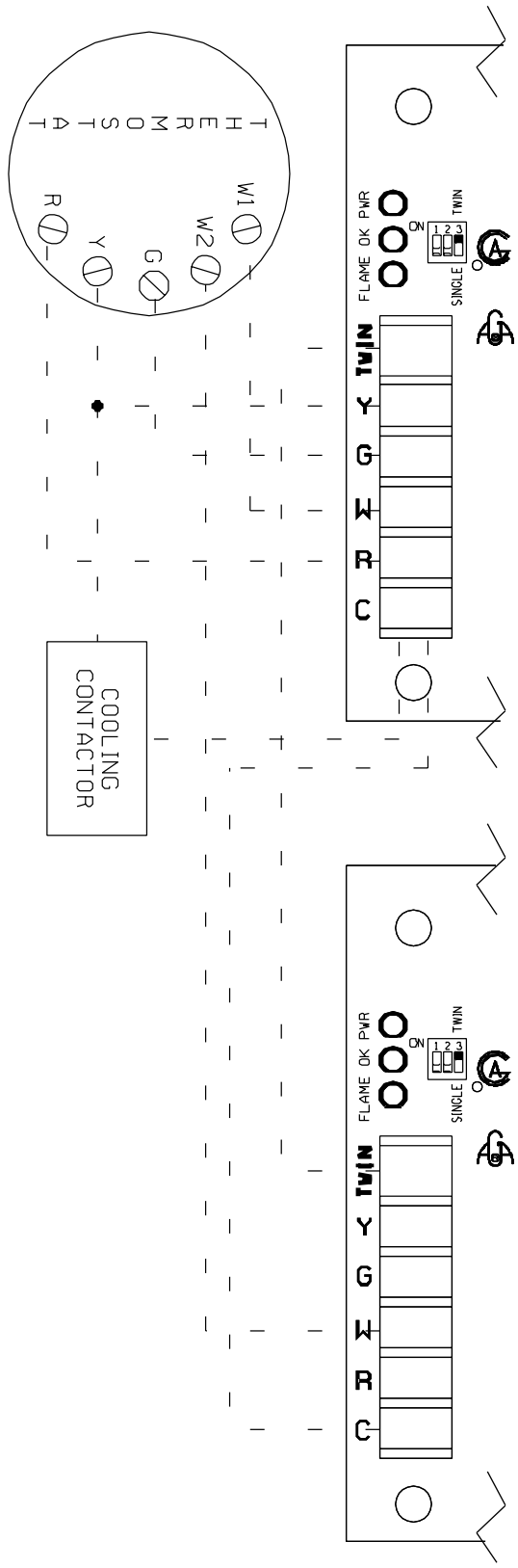

a099301

80+ HIGH ALTITUDE INSTRUCTIONS (TABLES 6 & 9)

⚠ CAUTION

THE NATIONAL FUEL GAS CODE (NFGC) GUIDELINES SHOULD BE FOLLOWED WHEN CONVERTING THESE FURNACES FOR HIGH ALTITUDE OPERATION.

34" 80 Plus furnaces installed above 2,000 ft. require the furnace to be de-rated 4% per thousand feet.

IMPORTANT: *Factory installed orifices are calculated and sized based on a sea level Natural Gas heating value of 1075 BTU per cubic ft.*

NOTE: Orifices are available through your local distributor.

Reference Tables 6 and 9 for appropriate orifice sizing.

The following are examples of orifice sizing using the National Fuel Gas Code Appendix F:

For a simplified estimation of orifice size based on gas heating value and elevation, Tables 6 and 9 may be used. However, calculations are the best method.

Example: 900 BTU/ft³ Regional Natural Gas Heating Value

I/H = Q
25000 / 900 = 27.78 ft³

I = Sea Level input (per burner): 25000
H = Sea Level Heating Value: 900
Q = 27.78 ft³ Natural Gas per hour.

From Table F.1 of *National Fuel Gas Code Handbook, 2002* (3.5″ w.c. column).

Orifice required at Sea Level: #40

From Table F.4 of *National Fuel Gas Code Handbook, 2002*
Orifice required at 5000 ft. elevation (4% de-rate per thousand ft): #42

Orifice required at 8000 ft. elevation (4% de-rate per thousand ft.): #44

Example: 1050 BTU/ft3 Regional Natural Gas Heating Value

I / H = Q
25000 / 1050 = 23.81ft³

I = Sea Level input (per burner): 25000
H = Sea Level Heating Value: 1050
Q = 23.81 ft³ Natural Gas per hour.

From Table F.1 of *Natural Fuel Gas Code Handbook, 2002* (3.5″ w.c. column).

Orifice required at Sea Level: #43

From Table F.4 of *National Fuel Gas Code Handbook, 2002*

Orifice required at 5000 ft. elevation (4% de-rate per thousand ft.): #45

Orifice required at 8000 ft elevation (4% de-rate per thousand ft): #47

LP GAS (TABLE 7)

NOTE: Keep any parts removed during LP conversion procedure stored with the product literature for future use.

LP Gas is a manufactured gas that has consistent heating value across most regions.

The NFGC guidelines are used with the following exception:

The recommended LP Gas high altitude orifice selections differ slightly in that the NFGC LP orifice chart, as they are not accurate for Rheem products. The National Fuel Gas Code LP orifices are based on an 11" of water column pressure at the orifice, which differs from products that use 10" of water column at the orifice. This difference requires a deviation from the NFGC orifice size recommendations. The Sea Level input should still be reduced by 4% per thousand ft. and the orifice size must be selected based on the reduced input in Table 7.

TABLE 6

Natural Gas Orifice Drill Size (4% per 1000 ft. De-Rate)
IMPORTANT: 80+ Models only. Do not use this chart for any 90+ Models.
Burner Input (per burner) 25,000 BTU @ Sea Level

Annual Avg. Heat Value (btu per ft³)	Sea level to 1999 ft	2000 to 2999 ft	3000 to 3999 ft	4000 to 4999 ft	5000 to 5999 ft	6000 to 5999 ft	7000 to 7999 ft	8000 to 8999 ft
850	38	39	40	41	41	42	42	43
900	40	41	42	42	42	43	43	44
975	41	42	42	42	43	43	44	44
1075	42	42	43	43	43	44	44	45
1170	43	44	44	44	45	45	46	47

TABLE 7
LP GAS
IMPORTANT: 80+ MODELS ONLY! DO NOT USE THIS CHART WITH ANY 90+ MODELS.

Altitude	Input (per burner) 25000	Orifice Size
0 to 2000 ft.	25000	#54
2000′-3000′	24000	#54
3000′-4000′	23000	#54
4000′-5000′	22000	#54
5000′-6000′	21000	#54
6000′-7000′	20000	#54
7000′-8000′	19000	#55
8000′-9000′	18000	#55
9000′-10000′	17000	#55

FIGURE 20
MANIFOLD PRESSURE-CHANGE LABEL

THE MANIFOLD PRESSURE OF THIS APPLIANCE HAS BEEN FIELD ADJUSTED TO OBTAIN THE CORRECT INPUT RATING FOR INSTALLATION AT ALTITUDES BETWEEN 2,000 FEET AND 4,500 FEET ELEVATION.

LA PRESSION DU DISTRIBUTEUR D'ALIMENTATION DE CET APPAREIL A ÉTÉ AJUSTÉ SUR LES LIEUX AFIN D'OBTENIR LA BONNE PUISSANCE D'ENTRÉE POUR UNE INSTALLATION ENTRE 2000 ET 4500 PIEDS D'ALTITUDE.

92-24399-01-01

ORIFICE ORDERING INFORMATION

Orifice sizes are selected by adding the 2-digit drill size required in the orifice part number. Drill sizes available are 39 through 64; metric sizes available 1.10mm (-90) and 1.15mm (-91):

Orifice Part Number 62-22175-(drill size)

Example 1:
60 drill size orifice required
Part # 62-22175-60

Example 2:
1.15mm drill size orifice required
Part # 62-22175-91

ALTERNATE METHOD FOR CANADIAN HIGH-ALTITUDE DERATE

In Canada, unless an orifice change is specifically mandated by local codes, an alternate method of altitude deration through a reduction in manifold pressure is acceptable as described in Table 8. This information is based on a heating value of 1000 BTU per cubic feet of natural gas, and 2500 BTU per cubic feet of LP gas.

IMPORTANT: *Actual input rates must be measured onsite with manifold pressure adjustment to ensure that an actual 10% reduction in input rate is achieved.*

Once this field adjustment has been made, the label shown in Figure 20 must be affixed in a conspicuous location on the front of the furnace cabinet.

NOTE: This label is supplied in the information packet shipped with each furnace.

TABLE 8
ALTERNATE METHOD FOR CANADIAN HIGH-ALTITUDE DERATE
IMPORTANT: 80+ MODELS ONLY! DO NOT USE THIS CHART WITH ANY 90+ MODELS.

NATURAL GAS

ALTITUDE	INPUT	OUTPUT	ORIFICE SIZE	MANIFOLD PRESSURE
0' - 2000'	50,000 75,000 100,000 125,000 150,000	40,000 60,000 80,000 100,000 120,000	#42	3.5" W.C.
2001' - 4500'	45,000 67,500 90,000 112,500 135,000	36,000 54,000 72,000 90,000 108,000	#42	2.9" W.C.

LP GAS

ALTITUDE	INPUT	OUTPUT	ORIFICE SIZE	MANIFOLD PRESSURE
0' - 2000'	50,000 75,000 100,000 125,000 150,000	40,000 60,000 80,000 100,000 120,000	#54	10" W.C.
2001' - 4500'	45,000 67,500 90,000 112,500 135,000	36,000 54,000 72,000 90,000 108,000	#54	8.1" W.C.

TABLE 9
SUPPLEMENTAL ORIFICE SIZE CHART

80 Plus Models only with 25,000 Btu's per Burner. Do not use this chart for any 90+ models.

NATURAL GAS QUICK REFERENCE CHART FOR ORIFICE SELECTION, AT 3.5" W.C. AND APPROXIMATE FINAL FIRING RATES												
Sea Level Orifice Size	**Sea Level Cubic Foot at 3.5" W.C.**	**80 Plus Heat Value at 25,000**	**ELEVATION CHART (NFG recommended orifice based on 4% derate for each 1000 foot of elevation, based on the intersection of the orifice required at Sea Level and the elevation required below)**									
			0-999	**1000-1999**	**2000-2999**	**3000-3999**	**4000-4999**	**5000-5999**	**6000-6999**	**7000-7999**	**8000-8999**	**9000-9999**
37	30.63	816	37	37	38	39	39	40	41	42	42	43
38	29.25	855	38	38	39	40	41	41	42	42	43	43
39	28.2	887	39	39	40	41	41	42	42	43	43	44
40	27.03	925	40	40	41	42	42	42	43	43	44	44
41	25.98	962	41	41	42	42	42	43	43	44	44	45
42	24.95	1002	42	42	42	43	43	43	44	44	45	46
43	22.39	1117	43	43	44	44	44	45	45	46	47	47
44	21.01	1190	44	44	45	45	45	46	47	47	48	48
Final Firing Rate per Burner			25,000	24,000	23,000	22,000	21,000	20,000	19,000	18,000	17,000	16,000

All calculations are performed by using the first three columns of information only. Before beginning any calculations, determine the individual burner Btu size and heating value at Sea Level for the installation site. Each value shown in the Heat Value column is per burner at 3.5" W.C.

NOTE:
Heat Value at Sea Level, for the location of the installation, is available from the Natural Gas Supplier to that site. Orifices for all altitudes are based on Sea Level values.

Divide the individual burner capacity (25,000 for 80 plus) by the Heat Value for the site to determine the Cubic Foot value at Sea Level, or divide burner capacity by the Cubic Foot value for the Heat Value. Once you have either the Cubic Foot Value or the Heat Value you can estimate the Sea Level orifice for the site. To select the corresponding high altitude orifice, locate the site elevation on the chart above and the orifice required at Sea Level from your calculation in the first column. The correct high altitude orifice that must be installed in each individual burner is the intersection of these two points on the chart above.

START-UP PROCEDURE

LIGHTING INSTRUCTIONS

This appliance is equipped with a direct spark ignition device. This device lights the main burners each time the room thermostat (closes) calls for heat. See lighting instructions on the furnace.

TO START FURNACE

⚠ WARNING

1. **BE SURE THAT THE MANUAL GAS VALVE HAS BEEN IN THE "OFF" POSITION FOR AT LEAST FIVE MINUTES. DO NOT ATTEMPT TO MANUALLY LIGHT THE MAIN BURNERS. FAILURE TO FOLLOW THIS WARNING CAN CAUSE A FIRE OR AN EXPLOSION RESULTING IN PROPERTY DAMAGE, PERSONAL INJURY OR DEATH.**
2. Set the thermostat to lowest setting.
3. Turn off all electric power to the appliance.
4. This appliance does not have a pilot. It is equipped with an ignition device which automatically lights the burner. Do NOT try to light the burner by hand.
5. Remove burner compartment door.
6. Move switch to the "OFF" position.

   NOTE: Use only your hand to move the gas control switch. Never use tools. If the switch will not move by hand, don't try to repair it; call a qualified service technician. Force or attempted repair may result in a fire or explosion.
7. Wait five (5) minutes to clear out any gas. Then smell for gas, including near the floor. If you smell gas, STOP! Follow the safety instructions on the front page of this manual. If you don't smell gas, go to the next step.
8. Move switch from "OFF" position to "ON" position.
9. Replace burner compartment door.
10. Turn on all electric power to the appliance.
11. Turn manual gas valve to the "ON" position.
12. Set the thermostat to desired setting.
13. If the appliance will not operate, follow the instructions below to shut down furnace and call your service technician or gas supplier.

TO TURN OFF GAS TO FURNACE

1. Set the thermostat to the lowest setting.
2. Turn off all electric power to the appliance if service is to be performed.
3. Turn manual gas valve to the "OFF" position.
4. Remove control door.
5. Move switch to the "OFF" position.
6. Replace control door.

⚠ WARNING

SHOULD OVERHEATING OCCUR OR THE GAS SUPPLY FAIL TO SHUT OFF, SHUT OFF THE MANUAL GAS VALVE TO THE APPLIANCE BEFORE SHUTTING OFF THE ELECTRICAL SUPPLY. FAILURE TO DO SO CAN CAUSE AN EXPLOSION OR FIRE RESULTING IN PROPERTY DAMAGE, PERSONAL INJURY OR DEATH.

SEQUENCE OF OPERATION

UT Electronic Controls Direct Spark Ignition

1. Each time the thermostat contacts close, the induced draft blower (inducer) begins a prepurge cycle.
2. The air proving negative pressure switch(es) closes.
3. **30 seconds after the pressure switch(es) close, the spark igniter energizes.** The induced draft blower operates for the complete heating cycle.
4. After the spark igniter energizes, t**he gas valve opens for a 8 second trial for ignition.**
5. The igniter lights the gas burners.
6. After the gas valve opens t**he flame sensor must prove flame ignition for one second** using the process of flame rectification. If the burners don't light, the system goes through another ignition sequence. It does this **up to four** times.
7. The main blower starts 20 seconds after the burners ignite.
8. When the thermostat cycle ends, the gas valve closes, the burners go out, the induced draft blower stops after a **10-second post-purge,** and the negative pressure switch(es) open.
9. The main blower continues until timed off by the setting on the integrated furnace control board.

Sequence if the system doesn't light or doesn't sense flame:

1. On a call for heat, the control runs the inducer for 30 seconds to pre-purge.
2. After the 30-second pre-purge, the spark igniter energizes. The inducer continues to run.
3. After the spark igniter energizes, the gas valve opens for an 8-second trial for ignition. The inducer continues and the igniter stays energized.
4. If flame is not sensed within 8 seconds after the gas valve opens, the gas valve closes, the igniter de-energizes and:
5. The inducer completes a 10-second post-purge, the inducer stops, and the control verifies that the pressure switch has opened. Once the open pressure switch is confirmed, the control begins the next ignition cycle by energizing the inducer for a pre-purge of 30 seconds. After the pre-purge, the igniter energizes and the gas valve opens (inducer continues to run). If no flame is sensed on the second attempt, the control goes into a "self-healing" mode, in which the blower and the inducer run for 3 minutes before another ignition attempt is made.
6. The control attempts to ignite up to four times (first attempt followed by three retries). After the fourth failure to ignite, the control goes into a one-hour "soft-lockout" during which the control will not respond to the thermostat heat call (W). The lockout can be reset by shutting off main power to the furnace for five seconds, or by turning the heat call (W) from the thermostat off and then back on.
7. The above sequence will repeat after a one hour delay. It will continue repeating until ignition is successful or the call for heat is terminated.
8. To reset the lock out, make and break power either at the thermostat or at the unit disconnect switch for 5 to 10 seconds. It then goes through another set of trials for ignition.

INTEGRATED FURNACE CONTROLS UPDATE (AFFECTS SINGLE STAGE EQUIPMENT ONLY)

The change will become effective during the 3rd quarter of 2004.

Current I.F.C.'s that turn on indoor blower and inducer when limit circuit opens during steady "on," continuous fan or cooling call:

Part numbers:

62-24140-02 (UTech full-featured, single-stage, direct-spark ignition)

62-24268-01 & 62-24268-02 (UTech builder's model hot-surface ignition)

New I.F.C.'s. These new part numbers will not turn on the indoor blower or the inducer when the limit or limit circuit is opened during steady "on," continuous fan or cooling call.

Part numbers:

62-24140-04 (UTech full-featured, single-stage, direct-spark ignition)

62-25338-01 (UTech builder's model, single-stage, direct-spark ignition)

62-24268-03 (UTech builder's model hot-surface ignition)

62-24192-01 (Invensys Climate Controls builder's model hot-surface ignition)

Our reliability department has identified open limits in hot attics to be a potential field issue with residential gas furnaces. Because of this, residential gas furnace operation will be modified on both single-stage direct-spark ignition and all hot-surface ignition I.F.C.'s (Integrated Furnace Controls).

As a consequence, some trouble-shooting approaches should be modified. In particular is a common field method to test for a properly functioning limit or limit circuit. The procedure is to disconnect the limit wires from the limit(s) during steady "on" or idle (no call for heat, cool or continuous fan present). When this was done in the past, the indoor blower and inducer would turn on immediately. However, with the new I.F.C.'s, this will no longer be the case. Instead, the unit will do nothing. The reason is that the system is ignoring the limit circuit in case of an accidental trip in a hot attic.

There are a couple of alternate approaches to testing the limit(s) or the limit circuit in the newer residential gas furnace equipment:

1. To test the limit itself, remove the wires and check with an ohmmeter. Under normal conditions, the meter should read zero ohms, indicating that the limit is closed and is not too hot or failed in the "open" state.
2. Remove the limit wires (simulating an open limit) during pre-purge of a heat call. During this time, the indoor blower should turn on and a fault code three (three blinks) should flash (inducer is already running at this time). The unit will not light until the limit circuit is closed.
3. Remove the limit wires (simulating an open limit) during steady-state heat (IE: flame present and indoor blower motor is running). The flame should extinguish immediately and a fault code three (three blinks) will flash. The indoor blower and inducer should continue running until the limit is closed.
4. To test the circuit to the limit, use an ohmmeter to check the wires from one limit to the next limit in the chain or to the I.F.C. (consult the wiring diagram(s)). Remember that good wire and connections should read zero ohms (or very close).

SETTING BLOWER TIMINGS

The UT Electronic Controls control boards have four quick connect terminals for connecting the motor speed leads. These are:

1. FAN SPEED* — motor runs on this speed when the thermostat is in the "FAN" position.
2. COOL — connect desired cooling speed.
3. HEAT — connect desired heating speed.
4. HEAT/COOL* — connect desired speed when heating and cooling speed are the same.

***NOTE**: These taps are not available on UT Electronic Controls 1097-200.

⚠ CAUTION

DO NOT CONNECT ANY MOTOR SPEEDS TO "HEAT" OR "COOL" IF YOU USE THE "HEAT/COOL" TERMINAL. DOING SO WILL DAMAGE THE BLOWER MOTOR. UNUSED MOTOR WIRE TAPS MUST BE CONNECTED TO PARKING TERMINALS M1 AND M2 OF THE IFC, OR PROPERLY INSULATED.

5. If heating and continuous speed are the same, jump across "FAN" and "HEAT" terminals.

NOTE: This does not apply to UT Electronic Controls 1097-200 models because the heat tap functions as the continuous fan tap as well.

See Figures 21 and 22 for instructions for setting the blower "OFF" timings.

GAS FURNACE (DIRECT DRIVE) INSTRUCTIONS FOR CHANGING BLOWER SPEED

⚠ WARNING

DISCONNECT THE ELECTRICAL SUPPLY TO THE FURNACE BEFORE ATTEMPTING TO CHANGE THE BLOWER SPEED. FAILURE TO DO SO CAN CAUSE ELECTRICAL SHOCK RESULTING IN SEVERE PERSONAL INJURY OR DEATH.

The blower motor is wired for blower speeds required for normal operation as shown.

If additional blower speed taps are available (leads connected to "M1" and "M2" on the electronic control), speeds may be changed if necessary to fit requirements of the particular installation. Reconnect the unused motor leads to "M1" or "M2." Check motor lead color for speed designation.

Heating speeds should not be reduced where it could cause the furnace air temperature to rise to exceed the maximum outlet air temperature specified for the unit.

FIGURE 21
UT Electronic Controls 1028-928
BLOWER OFF TIMINGS

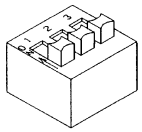

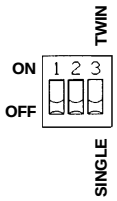

NOTE: SWITCH 3 IS USED FOR TWINNING APPLICATIONS.

I402

OFF TIME	SWITCH 1	SWITCH 2
90 SEC.	OFF	ON
120 SEC.	OFF	OFF
160 SEC.	ON	OFF
180 SEC.	ON	ON

FIGURE 22
UT Electronic Controls 1097-200
BLOWER OFF TIMINGS

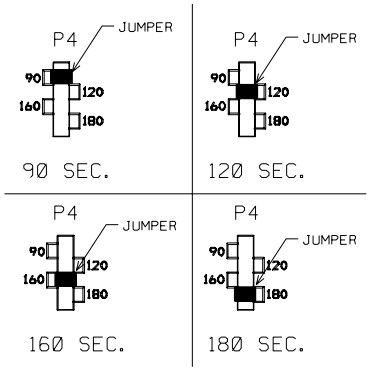

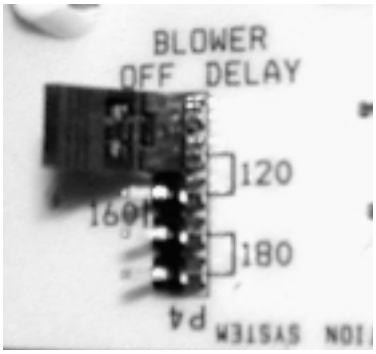

IMPORTANT: *Always check air temperature rise after changing the heating speed for any reason or if there are any changes to the duct system.*

AIR FLOW

The importance of proper air flow over the heat exchanger cannot be over emphasized.

⚠ CAUTION

IT IS IMPORTANT THAT EACH DUCT SYSTEM BE SIZED AND INSTALLED FOR THE SPECIFIC APPLICATION BY PROPERLY APPLYING THE APPROPRIATE INDUSTRY ACCEPTED STANDARD. IF LESS THAN MINIMUM STANDARDS ARE APPLIED, THE EQUIPMENT USER COULD EXPECT TO EXPERIENCE HIGHER UTILITY BILLS, MAJOR COMPONENT FAILURE, VARYING DEGREES OF AIR NOISE OR OTHER UNSATISFACTORY ISSUES, OVER WHICH THE MANUFACTURER HAS NO CONTROL.

One of the most common causes of heat exchanger failure is overheating due to low air flow. An air flow table is located inside the blower door and on the following pages.

TEMPERATURE RISE CHECK

To determine if the air flow is correct, make a temperature rise check.

1. Insert a thermometer in the supply air duct as close to the furnace as possible yet out of a direct line from the heat exchanger. See Figure 23.
2. Insert a thermometer in the return air duct as close to the furnace as possible.
3. Operate the furnace.
4. When the thermometer in the supply air duct stops rising (approximately five minutes), subtract the return air temperature from the supply air temperature. The difference is the temperature rise.
5. Compare the measured temperature rise to the approved temperature rise range listed on the furnace name plate. See Figure 24.

If the measured temperature rise is above the approved range, either the air flow is too low or the manifold pressure needs to be adjusted. More air must be moved by speeding up the blower, by removing restrictions in the duct system, or by adding more supply or return air duct. If the measured temperature rise is below the approved range, either the air flow is too much or the manifold pressure needs to be adjusted. Use lower speed tap on the multi-speed blower.

IMPORTANT: *The measured temperature rise should be in the middle of the range.*

IMPORTANT: *Some high-efficiency filters have a greater than normal resistance to airflow. This can adversely affect furnace operation. BE SURE TO CHECK AIRFLOW if using any filter other than factory-provided filter.*

FIGURE 23
TEMPERATURE RISE MEASUREMENT

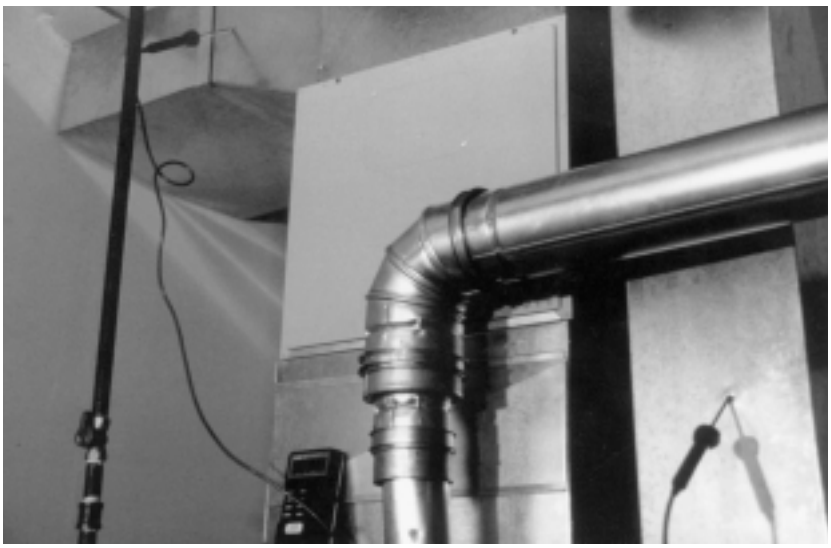

FIGURE 24
TYPICAL FURNACE NAME PLATE

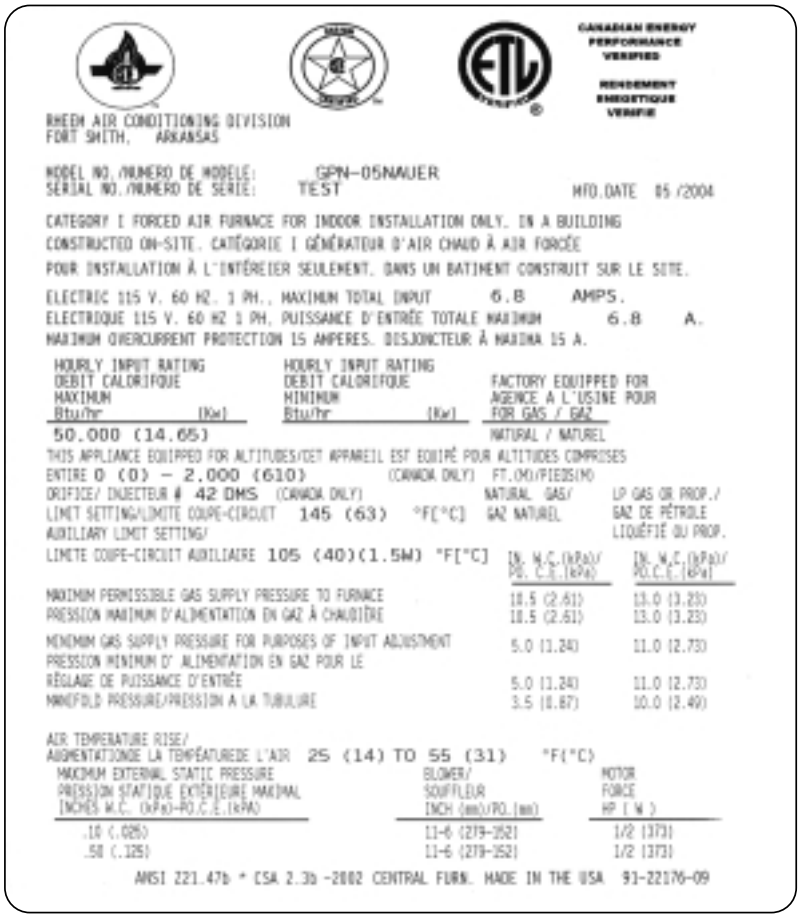

LUBRICATION

The indoor blower motor and induced draft motor are prelubricated by the motor manufacturer and do not require further attention.

The motors must be cleaned periodically by a qualified installer, service agency, or the gas supplier to prevent the possibility of overheating due to an accumulation of dust and dirt on the windings or on the motor exterior. Air filters should be kept clean. Dirty filters can restrict airflow and results in motor overheating.

BLOWER PERFORMANCE DATA – (-)GLN DOWNFLOW MODELS

MODEL NUMBER (-)GLN-SERIES	BLOWER SIZE [mm]	MOTOR H.P. [W]	BLOWER SPEED	CFM [L/s] AIR DELIVERY EXTERNAL STATIC PRESSURE INCHES [kPa] WATER COLUMN						
				.1 [.02]	.2 [.05]	.3 [.07]	.4 [.10]	.5 [.12]	.6 [.15]	.7 [.17]
05EAUER **05NAUER**	11 x 6 [279 x 152]	1/2 [373]	LOW MED-LO MED-HI HIGH	735 [347] 1025 [484] 1185 [559] 1345 [635]	715 [337] 1015 [479] 1165 [550] 1330 [628]	690 [326] 995 [470] 1150 [543] 1310 [618]	660 [311] 975 [460] 1130 [533] 1295 [611]	635 [300] 955 [451] 1100 [519] 1265 [597]	605 [286] 930 [439] 1075 [507] 1235 [583]	575 [271] 905 [427] 1040 [491] 1205 [569]
07EAMER **07NAMER**	11 x 7 [279 x 178]	1/2 [373]	LOW MED-LO MED-HI HIGH	921 [435] 1094 [516] 1239 [585] 1424 [672]	896 [423] 1066 [503] 1211 [571] 1398 [660]	870 [410] 1037 [489] 1182 [558] 1372 [647]	845 [398] 1014 [478] 1164 [549] 1339 [632]	819 [386] 990 [467] 1146 [541] 1306 [616]	783 [369] 949 [448] 1117 [527] 1267 [598]	746 [352] 907 [428] 1087 [513] 1228 [579]
07EAMGR **07NAMGR**	11 x 7 [279 x 178]	3/4 [559]	LOW MED-LO MED-HI HIGH	1210 [571] 1580 [746] 1915 [904] —	1205 [569] 1560 [736] 1880 [887] 2050 [967]	1195 [564] 1550 [732] 1825 [861] 1995 [942]	1180 [557] 1530 [722] 1790 [845] 1940 [916]	1165 [550] 1495 [706] 1740 [821] 1885 [890]	1155 [545] 1465 [691] 1675 [791] 1835 [866]	1130 [533] 1430 [675] 1600 [755] 1770 [835]
** **10EAMER** **10NAMER**	** 11 x 7 [279 x 178]	** 1/2 [373]	LOW MED-LO MED-HI HIGH	935 [441]** 1070 [505] 1240 [585] 1420 [670]	910 [429]** 1055 [498] 1210 [571] 1395 [658]	885 [418]** 1040 [491] 1190 [562] 1370 [647]	855 [404]** 1010 [477] 1165 [550] 1340 [632]	825 [389]** 980 [477] 1135 [536] 1305 [616]	785 [370]** 945 [446] 1095 [517] 1265 [597]	760 [359]** 905 [427] 1055 [498] 1220 [576]
10EBRJR **10NBRJR**	11 x 10 [279 x 254]	3/4 [559]	LOW MED-LO MED-HI HIGH	1330 [628] 1690 [798] — —	1295 [611] 1670 [788] 2085 [984] 2410 [1137]	1285 [606] 1655 [781] 2055 [970] 2355 [1111]	1245 [588] 1615 [762] 2005 [946] 2305 [1088]	1225 [478] 1585 [748] 1970 [930] 2240 [1057]	1205 [569] 1565 [739] 1945 [918] 2165 [1022]	1160 [547] 1525 [720] 1880 [887] 2100 [991]
12EARJR **12NARJR**	11 x 10 [279 x 254]	3/4 [559]	LOW MED-LO MED-HI HIGH	1330 [628] — — —	1295 [611] 1690 [798] 2090 [986] 2395 [1130]	1280 [604] 1660 [783] 2035 [960] 2335 [1102]	1240 [585] 1635 [772] 1985 [937] 2260 [1067]	1215 [573] 1580 [746] 1930 [911] 2185 [1031]	1210 [571] 1535 [724] 1850 [873] 2080 [982]	1175 [555] 1480 [698] 1785 [842] 1965 [927]
15EARJR **15NARJR**	11 x 10 [279 x 254]	3/4 [559]	LOW MED-LO MED-HI HIGH	1300 [614[1675 [791] 2105 [993] —	1280 [604] 1650 [779] 2075 [979] 2340 [1104]	1230 [580] 1620 [765] 2035 [960] 2290 [1081]	1205 [569] 1570 [741] 1990 [939] 2215 [1045]	1170 [552] 1545 [729] 1955 [923] 2145 [1012]	1115 [526] 1485 [701] 1900 [897] 2080 [982]	1030 [486] 1425 [673] 1815 [857] 1995 [942]

NOTES: **Not to be used as a heating speed
Data compiled with factory filters installed.

[ ] Designates Metric Conversions

BLOWER PERFORMANCE DATA – (-)GPN UPFLOW/HORIZONTAL MODELS

MODEL NUMBER (-)GPN-SERIES	BLOWER SIZE [mm]	MOTOR H.P. [W]	BLOWER SPEED	CFM [L/s] AIR DELIVERY EXTERNAL STATIC PRESSURE INCHES [kPa] WATER COLUMN						
				.1 [.02]	.2 [.05]	.3 [.07]	.4 [.10]	.5 [.12]	.6 [.15]	.7 [.17]
05EAUER 05NAUER	11 x 6 [279 x 152]	1/2 [373]	LOW **MED-LO** MED-HI HIGH	675 [319] **950 [448]** 1115 [526] 1270 [599]	655 [309] **930 [439]** 1090 [514] 1250 [590]	635 [300] **905 [427]** 1070 [505] 1225 [578]	610 [288] **880 [415]** 1040 [491] 1200 [566]	585 [276] **860 [406]** 1015 [479] 1165 [550]	555 [262] **830 [392]** 985 [465] 1130 [533]	520 [245] **800 [378]** 945 [446] 1085 [512]
07EAMER 07NAMER	11 x 7 [279 x 178]	1/2 [373]	LOW MED-LO **MED-HI** HIGH	921 [435] 1093 [563] **1241 [586]** 1393 [657]	897 [423] 1066 [503] **1212 [572]** 1359 [642]	872 [411] 1039 [490] **1183 [558]** 1326 [626]	845 [399} 1008 [476] **1150 [543]** 1293 [610]	818 [386] 977 [461] **1118 [528]** 1259 [594]	795 [375] 941 [444] **1076 [508]** 1214 [573]	746 [352] 905 [427] **1033 [487]** 1169 [552]
07EAMGR 07NAMGR	11 x 7 [279 x 178]	3/4 [559]	LOW **MED-LO** MED-HI HIGH	1245 [588] **1555 [734]** 1810 [854] 2050 [967]	1220 [576] **1515 [715]** 1755 [828] 1985 [937]	1195 [564] **1475 [696]** 1705 [805] 1915 [904]	1165 [550] **1435 [677]** 1645 [776] 1845 [871]	1135 [536] **1395 [658]** 1585 [748] 1785 [842]	1105 [522] **1350 [637]** 1530 [722] 1715 [809]	1065 [503] **1300 [614]** 1470 [694] 1655 [781]
* 10EAMER 10NAMR	* 11 x 7 [279 x 178]	* 1/2 [373]	LOW MED-LO **MED-HI** HIGH	925 [437]* 1050 [496] **1220 [576]** 1410 [665]	890 [420]* 1040 [491] **1195 [564]** 1380 [651]	865 [408]* 1030 [486] **1160 [547]** 1345 [635]	835 [394]* 990 [467] **1140 [538]** 1300 [614]	810 [382]* 960 [453] **1105 [522]** 1255 [592]	775 [366]* 920 [434] **1065 [503]** 1205 [569]	745 [352]* 890 [420] **1020 [481]** 1150 [543]
10EBRJR 10NBRJR	11 x 10 [279 x 254]	3/4 [559]	LOW **MED-LO** MED-HI HIGH	1295 [611] **1645 [776]** 2045 [965] 2320 [1095]	1275 [602] **1615 [762]** 2000 [944] 2260 [1067]	1250 [590] **1580 [746]** 1955 [923] 2200 [1038]	1225 [578] **1550 [732]** 1905 [899] 2130 [1005]	1195 [564] **1510 [713]** 1845 [871] 2060 [972]	1165 [550] **1465 [691]** 1785 [842] 1985 [937]	1135 [536] **1425 [673]** 1720 [812] 1910 [901]
12EARJR 12NARJR	11 x 10 [279 x 254]	3/4 [559]	LOW **MED-LO** MED-HI HIGH	1280 [604] **1645 [776]** 2050 [967] 2365 [1116]	1275 [602] **1635 [772]** 2015 [951] 2310 [1090]	1265 [597] **1615 [762]** 1960 [925] 2250 [1062]	1245 [588] **1590 [750]** 1935 [913] 2185 [1031]	1215 [573] **1560 [736]** 1885 [890] 2115 [998]	1185 [559] **1520 [717]** 1835 [866] 2035 [960]	1145 [540] **1470 [694]** 1775 [838] 1950 [920]
15EARJR 15NARJR	11 x 10 [279 x 254]	3/4 [559]	LOW **MED-LO** MED-HI HIGH	1270 [599] **1620 [765]** 2010 [949] 2340 [1104]	1250 [590] **1595 [753]** 1985 [937] 2275 [1074]	1220 [576] **1570 [741]** 1960 [925] 2215 [1045]	1195 [564] **1545 [729]** 1915 [904] 2145 [1012]	1165 [550] **1515 [715]** 1850 [873] 2080 [982]	1135 [536] **1480 [698]** 1800 [850] 2010 [949]	1105 [522] **1440 [680]** 1730 [816] 1940 [916]

NOTES: *Not to be used as a heating speed.
Data compiled with factory filters installed.
Recommended blower speeds are in bold.

IMPORTANT: *Airflow must be checked at the return and the furnace outlet ahead of the coil.*

BLOWER PERFORMANCE DATA – (-)GPP UPFLOW/HORIZONTAL MODELS

MODEL NUMBER (-)GPP-SERIES	BLOWER SIZE [mm]	MOTOR H.P. [W]	BLOWER SPEED	CFM [L/s] AIR DELIVERY EXTERNAL STATIC PRESSURE INCHES [kPa] WATER COLUMN						
				.1 [.02]	.2 [.05]	.3 [.07]	.4 [.10]	.5 [.12]	.6 [.15]	.7 [.17]
05EAUER **05NAUER**	11 x 6 [279 x 152]	1/2 [373]	LOW **MED-LO** MED-HI HIGH	675 [319] **950 [448]** 1115 [526] 1270 [599]	655 [309] **930 [439]** 1090 [514] 1250 [590]	635 [300] **905 [427]** 1070 [505] 1225 [578]	610 [288] **880 [415]** 1040 [491] 1200 [566]	585 [276] **860 [406]** 1015 [479] 1165 [550]	555 [262] **830 [392]** 985 [465] 1130 [533]	520 [245] **800 [380]** 945 [446] 1085 [512]
07EAMER **07NAMER**	11 x 7 [279 x 178]	1/2 [373]	LOW **MED** HIGH	1093 [563] **1241 [586]** 1393 [657]	1066 [503] **1212 [572]** 1359 [642]	1039 [490] **1183 [558]** 1326 [626]	1008 [476] **1150 [543]** 1293 [610]	977 [461] **1118 [528]** 1259 [594]	941 [444] **1076 [508]** 1214 [573]	905 [427] **1033 [487]** 1169 [552]
07EAMGR **07NAMGR**	11 x 7 [279 x 178]	1/2 [373]	LOW **MED** HIGH	1245 [588] **1555 [734]** 1810 [854]	1220 [576] **1515 [715]** 1755 [838]	1195 [564] **1475 [696]** 1705 [805]	1165 [550] **1435 [677]** 1645 [776]	1135 [536] **1395 [658]** 1585 [748]	1105 [522] **1350 [637]** 1530 [722]	1065 [503] **1300 [614]** 1470 [694]
10EAMER **10NAMER**	11 x 7 [279 x 178]	1/2 [373]	LOW **MED** HIGH	1050 [496] **1220 [576]** 1410 [665]	1040 [491] **1195 [564]** 1380 [651]	1030 [486] **1160 [547]** 1345 [635]	990 [467] **1140 [538]** 1300 [614]	960 [453] **1105 [522]** 1255 [592]	920 [434] **1065 [503]** 1205 [569]	890 [420] **1020 [481]** 1150 [543]
10EBRGR **10NBRGR**	11 x 10 [279 x 254]	1/2 [373]	LOW **MED** HIGH	1295 [611] **1645 [776]** 2045 [965]	1275 [602] **1615 [762]** 2000 [944]	1250 [590] **1580 [746]** 1955 [923]	1225 [578] **1550 [732]** 1905 [899]	1195 [564] **1510 [713]** 1845 [871]	1165 [550] **1465 [691]** 1785 [842]	1135 [536] **1425 [672]** 1720 [812]
10EBRJR **10NBRJR**	11 x 10 [279 x 254]	3/4 [559]	**LOW** MED HIGH	**1645 [776]** 2045 [965] 2320 [1095]	**1615 [762]** 2000 [944] 2260 [1067]	**1580 [746]** 1955 [923] 2200 [1038]	**1550 [732]** 1905 [899] 2130 [1005]	**1510 [713]** 1845 [871] 2060 [972]	**1465 [691]** 1785 [842] 1985 [937]	**1425 [673]** 1720 [812] 1910 [901]
12EARJR **12NARJR**	11 x 10 [279 x 254]	3/4 [559]	**LOW** MED HIGH	**1645 [776]** 2050 [967] 2365 [1116]	**1635 [772]** 2015 [951] 2310 [1090]	**1615 [762]** 1980 [934] 2250 [1062]	**1590 [750]** 1935 [913] 2185 [1031]	**1560 [736]** 1885 [890] 2115 [998]	**1520 [717]** 1835 [866] 2035 [960]	**1470 [694]** 1775 [838] 1950 [920]
15EARJR **15NARJR**	11 x 10 [279 x 254]	3/4 [559]	**LOW** MED HIGH	**1620 [765]** 2010 [949] 2340 [1104]	**1595 [753]** 1985 [937] 2275 [1074]	**1570 [741]** 1960 [925] 2215 [1045]	**1545 [729]** 1915 [904] 2145 [1012]	**1515 [715]** 1850 [873] 2080 [982]	**1480 [698]** 1800 [850] 2010 [949]	**1440 [680]** 1730 [816] 1940 [916]

Note: Recommended blower speeds are in bold.

IMPORTANT: *Airflow must be checked at the return and the furnace outlet ahead of the coil.*

NOTE: (-)GPP airflow external static pressure does not include filter or coil.

SAFETY FEATURES

LIMIT CONTROL

The high limit cut-off temperature is set at the factory and cannot be adjusted. The temperature setting prevents the air temperature leaving the furnace from exceeding the maximum outlet air temperature, which, if exceeded, will shut the furnace down.

There are several reasons for a limit switch to open and almost always involve low airflow through the furnace.

1. A dirty or restricted air filter.
2. A dirty or restricted cooling coil.
3. Undersized or restricted return air system.
4. Undersized or restricted supply air system.
5. A problem affecting the main blower:
   - A. A wrong speed tap selection.
   - B. Failing motor bearings.
   - C. Low voltage to the motor.
   - D. Dirty blower wheel.
   - E. Wrong motor rotation.
   - F. Blower wheel slipping on the motor shaft.
6. Overfiring the furnace with too much gas pressure.
7. Ventilation problems.

FLAME ROLL-OUT SAFETY SWITCHES

Furnaces are equipped with safety switches to protect against flame roll-out conditions in the burner compartment, which, if tripped, will terminate the heating cycle. In the event of a flame roll-out condition, the switch will shut the furnace down. Switches for the (-)GPN/(-)GPP furnaces are located on either side of the burner cover plate and just above the burners on the blower divider panel. The (-)GLN requires only one switch on the left side of burner cover plate. If a switch is tripped, it must be manually reset. DO NOT jumper or reset this switch. If this switch should trip, a qualified installer, service agency or the gas supplier should be called to diagnose and/or correct the source of tripping. If this unit is mounted in a closet, the door must be closed when making this check.

PRESSURE SWITCH

This furnace is equipped with a normally-open pressure switch that monitors pressure conditions within the furnace vent system during the heating cycle.

There are several reasons for the pressure switch not to close.

1. An inoperative induced draft blower.
2. A loose or leaky pressure switch hose.
3. A blockage in the vent.
4. Severe downdrafts canceling the draft from the inducer fan.
5. A leaky gasket at the induced draft blower.
6. Improperly sized or installed vent.

The pressure switch contacts must open before the unit can go through another heating cycle.

See troubleshooting chart in this book for troubleshooting recommendations.

MAINTENANCE

⚠ WARNING

DISCONNECT MAIN ELECTRICAL POWER TO THE UNIT BEFORE ATTEMPTING ANY MAINTENANCE. FAILURE TO DO SO CAN CAUSE ELECTRICAL SHOCK RESULTING IN SEVERE PERSONAL INJURY OR DEATH.

FILTERS

NOTE: (-)GPP models **are not** factory equipped with filters or filter rods. Filters must be field installed.

Filter application and placement are critical to airflow, which may affect the heating and cooling system performance. Reduced airflow can shorten the life of the systems major components, such as motor, limits, elements, heat exchanger, evaporator coil or compressor. Consequently, we recommend that the return air duct system have only one filter location. The most common location will be inside the furnace or air handler or a filter base. For systems with a return air filter grill or multiple filter grills, can have a filter installed at each of the return air openings. DO NOT DOUBLE FILTER THE RETURN AIR DUCT SYSTEM. DO NOT FILTER THE SUPPLY AIR DUCT SYSTEM.

TABLE 10 FILTER SIZES

UPFLOW FILTER SIZES AS SHIPPED				
FURNACE WIDTH	INPUT BTUH	BOTTOM SIZE	SIDE SIZE	QUANTITY
14	50	12¼" X 25"	15¾" X 25"	1
17½"	75 & 100	15¾" X 25"	15¾" X 25"	1
21"	100	19¾" X 25"	15¾" X 25"	1
24½"	125 & 150	22¾" X 25"	15¾" X 25"	1

***NOTE:** Some filters must be ordered or resized to fit certain units and applications.

If high efficiency filters or electronic air cleaners are used in the system, it is important that the airflow is not reduced to maximize system performance and life. Always verify that the systems airflow is not impaired by the filtering system that has been installed, by performing a temperature rise and temperature drop test.

Keep the air filters clean at all times. Vacuum dirt from filter, wash with detergent and water, air dry thoroughly and reinstall.

See Table 10 and Figures 26 and 27 for proper filter sizes and locations.

1. 14”- 50,000 BTUH unit requires removal of 3½” segment of filter and frame to get proper width for a bottom filter.
2. 21”-100,000 BTUH unit requires removal of 3½” segment of filter and frame to get proper width for a side filter.
3. 24½”-125,000 and 150,000 BTUH units require removal of 7” segment of filter and frame to get proper width for a side filter.

IMPORTANT: *Do not operate the system for extended periods without filters. A portion of the dust entrained in the air may temporarily lodge in the air duct runs and at the supply registers. Any circulated dust particles will be heated and charred by contact with the furnace heat exchanger. This sooty residue will soil ceilings, walls, drapes, carpets, and other household articles. Soot damage may also result with, or without, filters in place, when certain types of candles are burned, or candlewicks are left untrimmed.*

FIGURE 25
FILTER RETAINING ROD

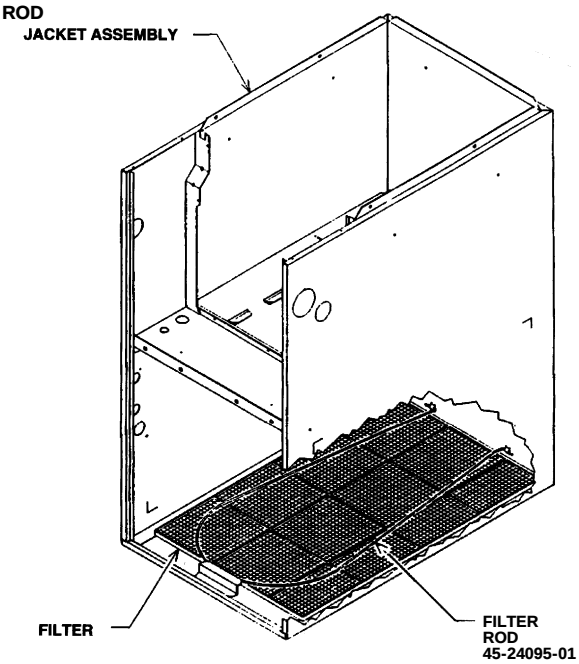

FILTER & ROD LOCATION

FIGURE 26
UPFLOW FILTER RETAINING ROD (SIDE RETURN)

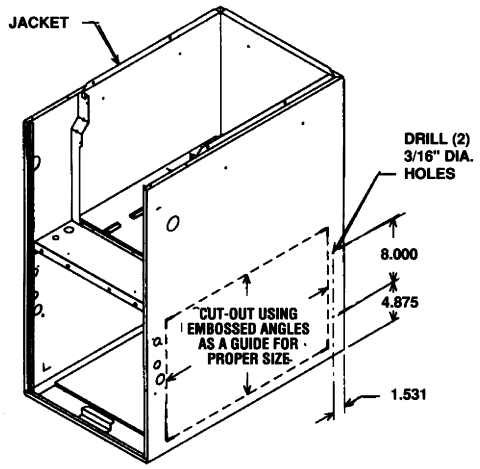

CUT-OUT AND DRILL DETAIL

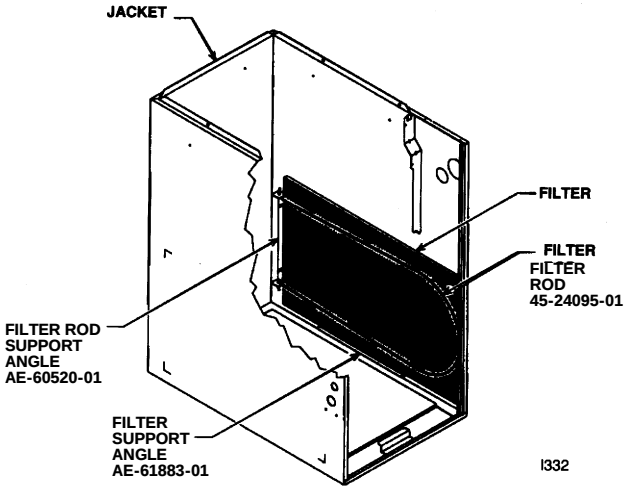

FILTER AND ROD ASSEMBLY

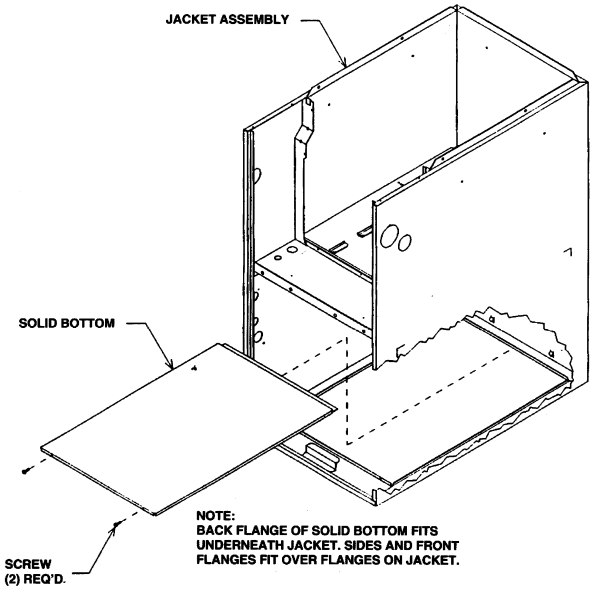

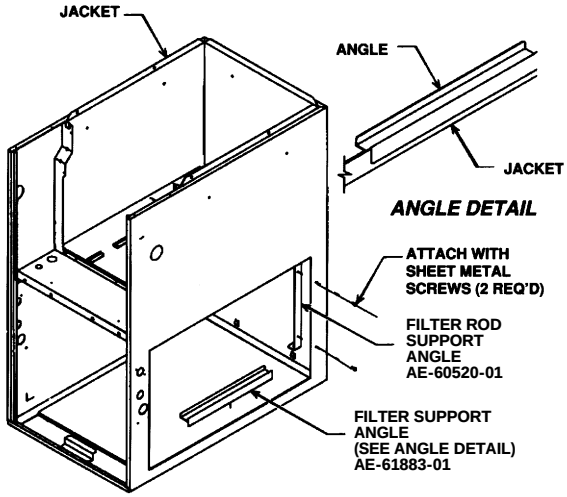

ROD & FILTER SUPPORT ANGLE ASSEMBLY

SOLID BOTTOM MAY BE ORDERED FROM THE FACTORY.

FIGURE 27
DOWNFLOW FILTER INSTALLATION

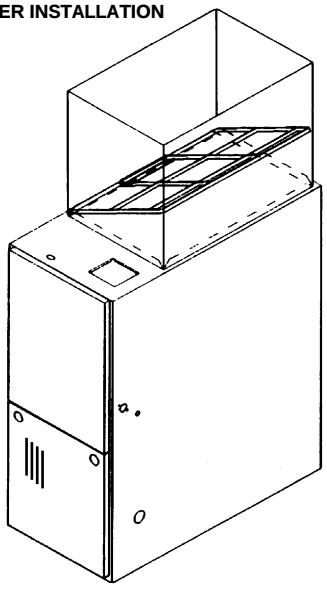

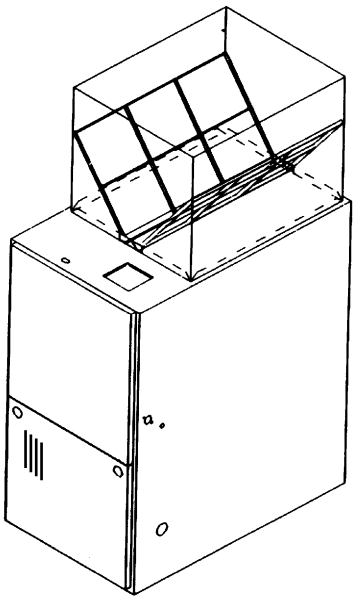

SYSTEM OPERATION INFORMATION

Advise The Customer To:

1. Keep the air filters clean. The heating system will operate better, more efficiently and more economically.
2. Arrange the furniture and drapes so that the supply air registers and the return air grilles are unobstructed.
3. Close doors and windows. This will reduce the heating load on the system.
4. Avoid excessive use of kitchen & bathroom exhaust fans.
5. Do not permit the heat generated by television, lamps or radios to influence the thermostat operation.
6 Except for the mounting platform, keep all combustible articles three feet from the furnace and vent system.
7. **IMPORTANT**: *Replace all blower doors and compartment covers after servicing the furnace. Do not operate the unit without all panels and doors securely in place.*
8. Proper operation of the system with constant air circulation.

⚠ WARNING

COMBUSTIBLE MATERIAL MUST NOT BE PLACED ON OR AGAINST THE FURNACE JACKET OR WITHIN THE SPECIFIED CLEARANCES OF THE VENT PIPE. THE AREA AROUND THE FURNACE MUST BE KEPT CLEAR AND FREE OF ALL COMBUSTIBLE MATERIALS INCLUDING GASOLINE AND OTHER FLAMMABLE VAPORS AND LIQUIDS. PLACEMENT OF COMBUSTIBLE MATERIALS ON, AGAINST OR AROUND THE FURNACE JACKET CAN CAUSE AN EXPLOSION OR FIRE RESULTING IN PROPERTY DAMAGE, PERSONAL INJURY OR DEATH. THE FURNACE OWNER SHOULD BE CAUTIONED THAT THE FURNACE AREA MUST NOT BE USED AS A BROOM CLOSET OR FOR ANY OTHER STORAGE PURPOSES.

ANNUAL INSPECTION

The furnace should operate for many years without excessive scale build-up in the flue passageways, however, it is recommended that a qualified installer, service agency, or the gas supplier actually inspect the flue passageways, the vent system and the main burners for continued safe operation paying particular attention to deterioration from corrosion or other sources.

⚠ WARNING

HOLES IN THE VENT PIPE OR HEAT EXCHANGER CAN CAUSE TOXIC FUMES TO ENTER THE HOME RESULTING IN CARBON MONOXIDE POISONING OR DEATH. THE VENT PIPE OR HEAT EXCHANGER MUST BE REPLACED IF THEY LEAK.

- **IMPORTANT:** *It is recommended that at the beginning of the heating season and approximately midway in the heating season a visual inspection be made of the main burner flames for the desired flame appearance by a qualified installer, service agency, or the gas supplier.*
- **IMPORTANT:** *It is also recommended that at the beginning of the heating season, the flame sensor be cleaned with steel wool by a qualified installer, service agency, or the gas supplier.*
- **IMPORTANT:** *It is recommended that an annual inspection and cleaning of all furnace markings be made to assure legibility. Attach a replacement marking, which can be obtained through the distributor, if any are found to be illegible or missing.*

IMPORTANT: ***FOR Nox MODELS –*** *At the beginning of the heating season a visual inspection of the Nox device should be made to ensure they have not become obstructed by insects nests or anything else which may effect performance.*

LUBRICATION

The indoor blower motor and induced draft motor are prelubricated by the motor manufacturer and do not require further attention.

The motors must be cleaned periodically by a qualified installer, service agency, or the gas supplier to prevent the possibility of overheating due to an accumulation of dust and dirt on the windings or on the motor exterior. Air filters should be kept clean. Dirty filters can restrict airflow and results in motor overheating.

Reference Figure 28 for proper removal of the blower assembly on downflow models.

REPLACEMENT PARTS

Contact your local distributor for a complete parts list.

NOx MODELS

When converting furnaces equipped with NOx inserts to LP gas, remove the NOx insert assemblies.

TROUBLESHOOTING

Refer to Figure 29 for determining cause of unit problems.

WIRING DIAGRAM

Figures 30 and 31 are complete wiring diagrams for the furnace and power sources.

FIGURE 28
DOWNFLOW BLOWER REMOVAL

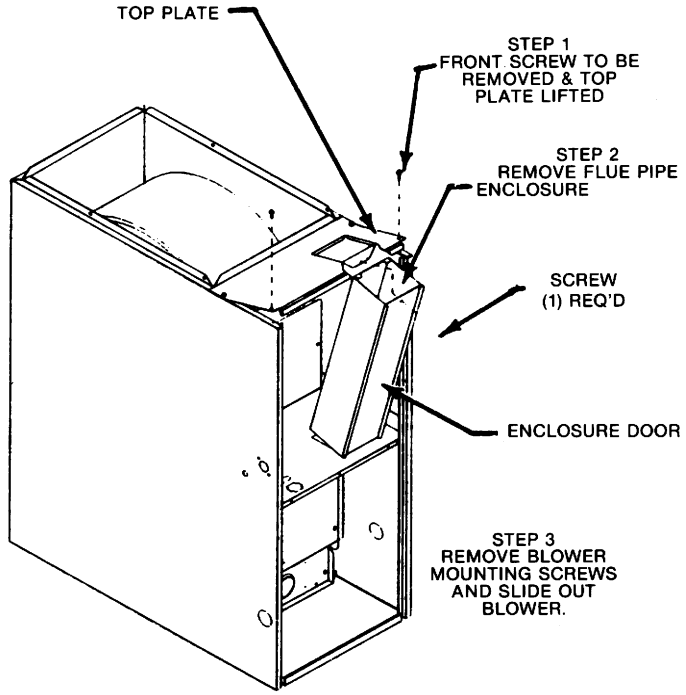

NOTE: FLUE PIPE ENCLOSURE & ENCLOSURE DOOR MUST BE REMOVED FOR BLOWER REMOVAL.

FIGURE 29
TROUBLESHOOTING FLOWCHART

INTEGRATED FURNACE CONTROL (IFC) TROUBLESHOOTING GUIDE

NOTE: Most failures are not due to the IFC. Double check all other possibilities, including the ground connection, before replacing the IFC.

NOTE: Always verify gas valve inlet and outlet gas pressure.

WARNING

HAZARDOUS VOLTAGE LINE VOLTAGE CONNECTIONS

DISCONNECT POWER BEFORE SERVICING. SERVICE MUST BE BY A TRAINED, QUALIFIED SERVICE TECHNICIAN.

FLAME (AMBER) LED CODES
OFF = No Flame Present
RAPID BLINK = Unexpected Flame
SLOW BLINK = Marginal Flame Sense
STEADY ON = Normal Flame Sense

KEY TO ABBREVIATIONS
IBM = Indoor Blower Motor
IDM = Induced Draft Motor
IFC = Integrated Furnace Control
PS = Pressure Switch(es)
SE = Spark Electrode
HSI = Hot-Surface Ignition
DSI = Direct-Spark Ignition

BLINK CODES (GREEN LED)
1 Blink - Soft lockout
Reset System power and start over from beginning
2 Blinks - PS Circuit open
go to point "F."
3 Blinks - Limit circuit open
go to point "D."
4 Blinks - PS Circuit closed
Go to point "G."
5 Blinks - Twin Fault (Optional)
*Go to point "H."

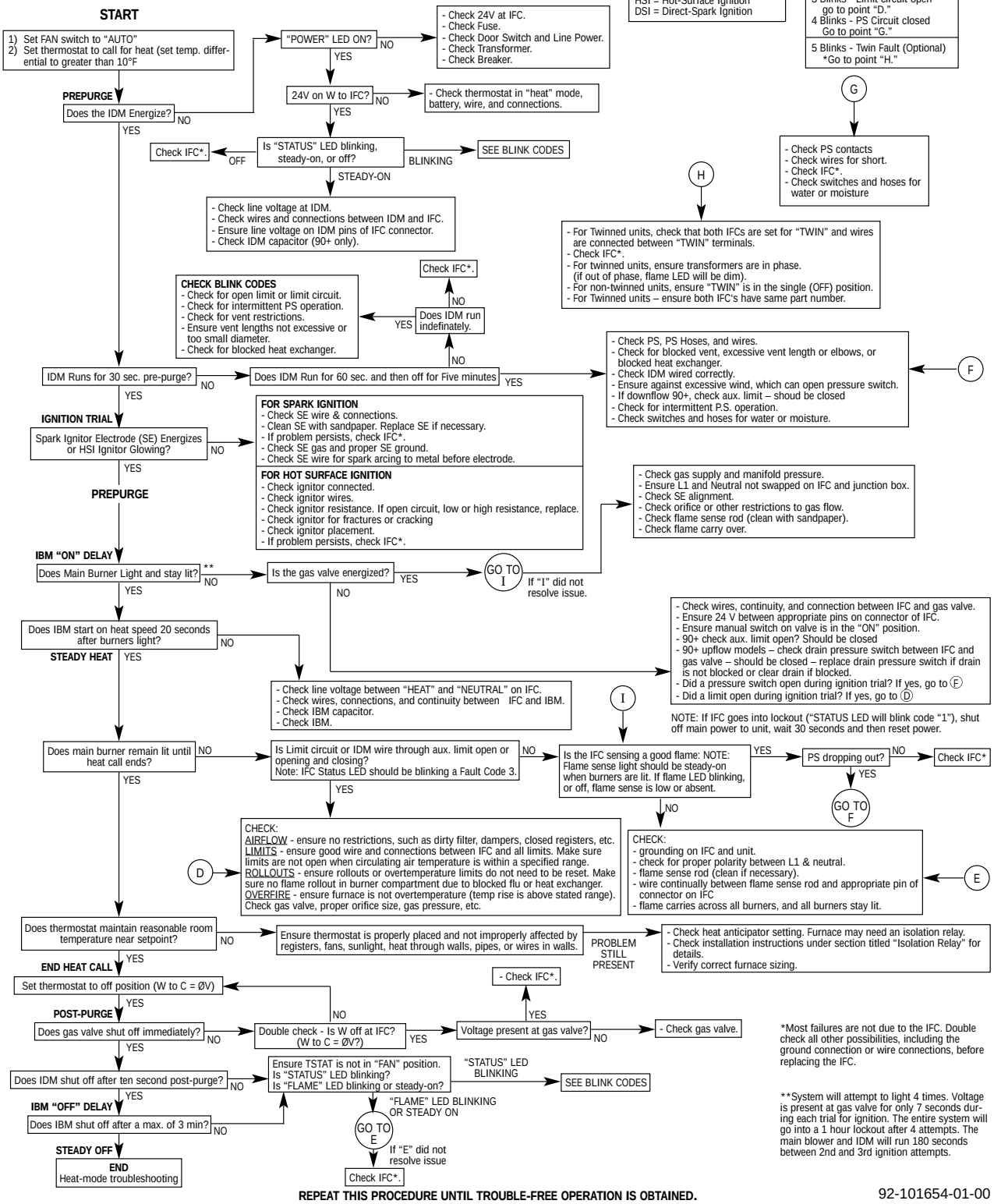

*Most failures are not due to the IFC. Double check all other possibilities, including the ground connection or wire connections, before replacing the IFC.

**System will attempt to light 4 times. Voltage is present at gas valve for only 7 seconds during each trial for ignition. The entire system will go into a 1 hour lockout after 4 attempts. The main blower and IDM will run 180 seconds between 2nd and 3rd ignition attempts.

REPEAT THIS PROCEDURE UNTIL TROUBLE-FREE OPERATION IS OBTAINED.

92-101654-01-00

FIGURE 30

FOR MODELS WITH UT ELECTRONIC CONTROLS 1028-928 INTEGRATED FURNACE CONTROL AND DIRECT SPARK IGNITION

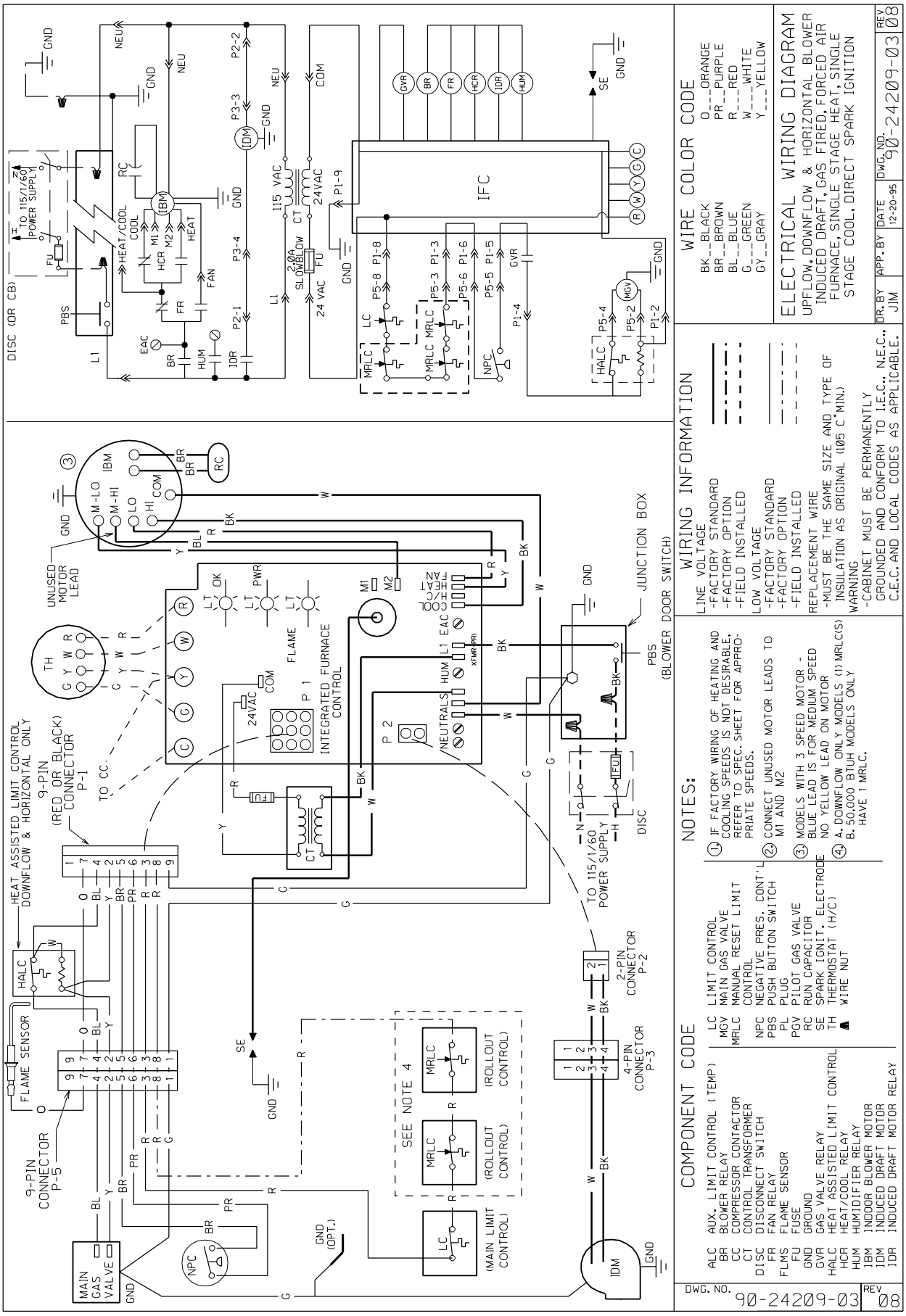

FIGURE 31
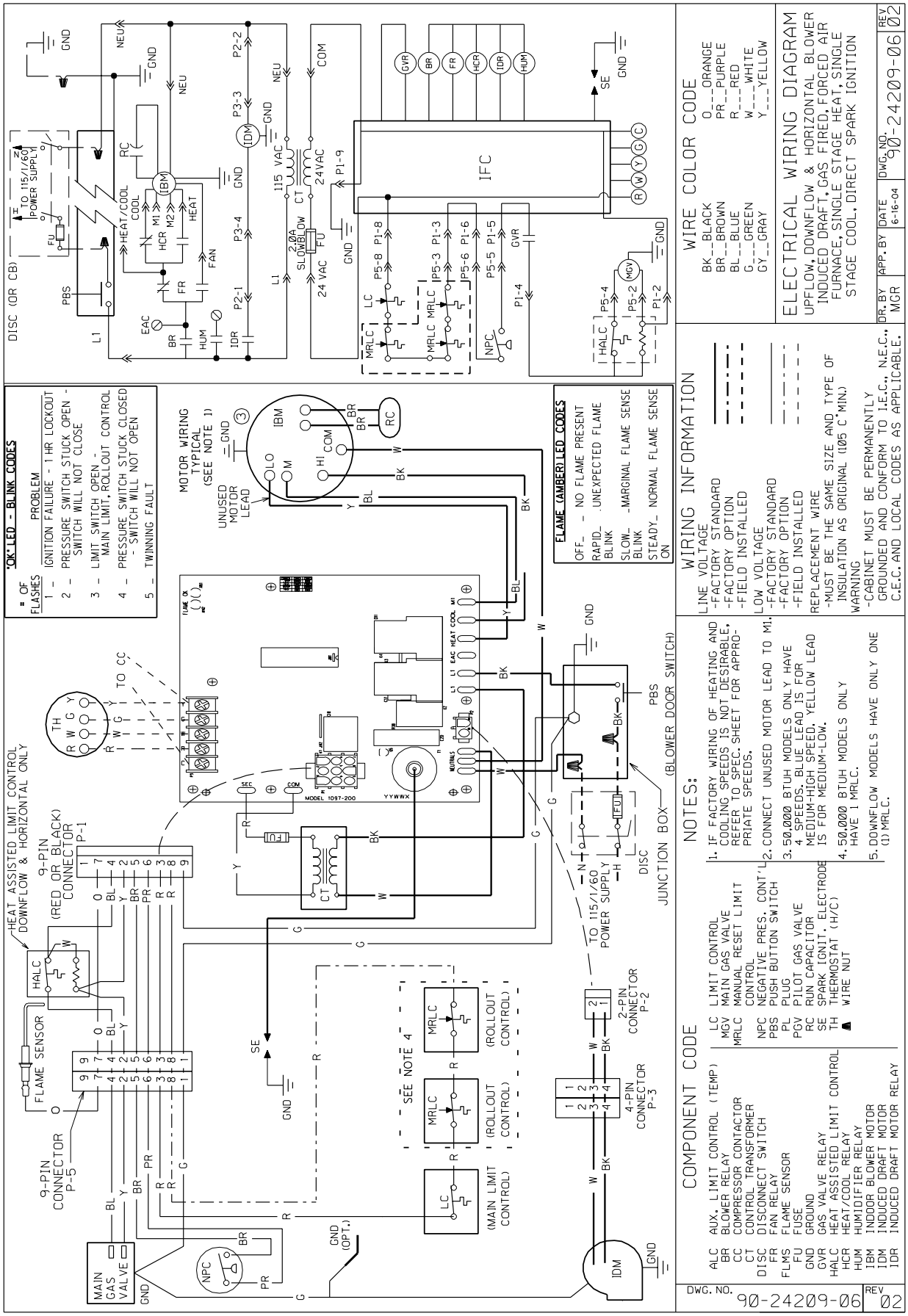
FOR MODELS WITH UT ELECTRONIC CONTROLS 1027-200 INTEGRATED FURNACE CONTROL AND DIRECT SPARK IGNITION